SERVICE MANUAL

AM/FM STEREO RECEIVER

SANSUI 8080DB/9090DB
890DB/990DB

Sansui

SANSUI ELECTRIC CO., LTD.

This service manual is designed for service engineers to repair, adjust, maintain and order the replacement parts of the 8080DB/9090DB, 890DB/990DB correctly.
When ordering the parts, use the stock number and parts name specifically referring to the Parts Location and Parts Lists.
For general usage and maintenance of the unit, please refer to the Operating Instructions attached with the unit.

TABLE OF CONTENTS

Section	Title	Page
1.	**SPECIFICATIONS**	2
2.	**BLOCK DIAGRAM**	3
2- 1.	Audio Section	3
2- 2.	Tuner Section	3
2- 3.	Dolby Mode Section	4, 5
3.	**OPERATION OF DOLBY FM SYSTEM**	6
4.	**ADJUSTMENTS**	6
4- 1.	Dolby Circuit Adjustment	6, 7
4- 2.	Adjustment of Audio Section	7, 8
4- 3.	Adjustment of Tuner Section	8, 9
5.	**PARTS LOCATION AND PARTS LIST**	10
5- 1.	F-2549 AM, FM Tuner Circuit Board	10
5- 2.	F-2627 Illumination Circuit Board	10
5- 3.	F-1519 Front-end Pack	11
5- 4.	F-2653 Equalizer Circuit Board	11
5- 5.	F-2624 Driver Circuit Board	12
5- 6.	F-2544 Tone Control Circuit Board	12
5- 7.	F-2617 Mic AMP. Circuit Board	13
5- 8.	F-2619 Power Supply Circuit Board of RF Section	13
5- 9.	F-2657 Power Relay Circuit Board	13
5-10.	F-2656 Power Supply Circuit Board	14
5-11.	F-2684 Connector Circuit Board (C)	14
5-12.	F-2682 Connector Circuit Board (A)	14
5-13.	F-2683 Connector Circuit Board (B)	14
5-14.	F-2692 Connector Circuit Board	14
5-15.	F-2695 LED Ass'y Circuit Board	14
5-16.	F-2654 Push Switch Circuit Board	15
5-17.	F-2655 Dolby NR Circuit Board	15
5-18.	F-2623 Filter Circuit Board	16
5-19.	F-2693 Push Switch Circuit Board	16
5-20.	F-2694 Dolby Volume Circuit Board	16
5-21.	F-2690 DIN Terminal Circuit Board	16
5-22.	Figures	16
6.	**OTHER PARTS**	17
6- 1.	Top Side	17
6- 2.	Bottom Side	17
6- 3.	Exploded View	18
7.	**SCHEMATIC DIAGRAM**	19
7- 1.	Tuner Section (8080DB/9090BD, 890DB/990DB)	19
7- 2.	Audio Section (8080DB/890DB)	20
7- 3.	Audio Section (9090DB/990DB)	21
8.	**THREADING OF DIAL CORD**	22
8- 1.	Threading of Dial Cord	22
8- 2.	Attachment of Dial Pointer	22
9.	**PACKING LIST**	back cover
10.	**ACCESSORY PARTS LIST**	back cover

1. SPECIFICATIONS

AUDIO SECTION

POWER OUTPUT

MODEL 8080DB/890DB

Min. RMS, both channels driven, from 20 to 20,000Hz, with no more than 0.1% total harmonic distortion

85 watts per channel into 8 ohms
Min. RMS, both channels driven, at 1,000Hz, with no more than 0.1% total harmonic distortion
95 watts per channel into 8 ohms

MODEL 9090DB/990DB

Min. RMS, both channels driven, from 20 to 20,000Hz, with no more than 0.1% total harmonic distortion

125 watts per channel into 8 ohms
Min. RMS, both channels driven, at 1,000Hz, with no more than 0.1% total harmonic distortion
135 watts per channel into 8 ohms

MODEL 8080DB/890DB,9090DB/990DB

LOAD IMPEDANCE ..... 8 ohms
POWER BANDWIDTH ..... 20 to 20,000Hz at or below rated min. RMS power output and total harmonic distortion
TOTAL HARMONIC DISTORTION ..... less than 0.1% at or below rated min. RMS power output
INTERMODULATION DISTORTION (70Hz : 7kHz=4 : 1 SMPTE method) ..... less than 0.1%
FREQUENCY RESPONSE (at 1 watt) ..... 10 to 30,000Hz ±1dB
RIAA CURVE DEVIATION (PHONO) ..... +0.3dB, −0.3dB (30Hz to 15kHz)
DAMPING FACTOR ..... approximately 30 at 8 ohm load
INPUT SENSITIVITY AND IMPEDANCE (1 kHz, for rated power output)
- PHONO-1, 2 ..... 2.5mV/50 kilohms (Max. input capability. 180mV at 1kHz, less than 0.2% total harmonic distortion.)
- MIC ..... 4mV/10 kilohms
- TAPE-1, 2 PLAY, AUX ..... 150mV/50 kilohms
- MAIN IN ..... 775mV/100 kilohms

OUTPUT LEVEL (1,000Hz)
- TAPE-1, 2 REC (pin jacks) 150mV
- TAPE-2 REC/PLAY (DIN socket) .. 30mV
- PRE OUT 775mV

CHANNEL SEPARATION (at rated output 1,000Hz)
- PHONO-1, 2 ..... better than 50dB
- TAPE-1, 2 PLAY, AUX ..... better than 50dB

HUM AND NOISE
- PHONO-1, 2 ..... better than 70dB
- TAPE-1, 2 PLAY, AUX ..... better than 80dB

*Dolby Noise Reduction effect .. 10dB (above 5kHz)

CONTROLS

MODEL 8080DB/890DB

- BASS ..... ±10dB (50Hz)
- MIDRANGE ..... ±5dB (1.5kHz)
- TREBLE ..... ±10dB (10kHz)
- LOUDNESS ..... +8dB (50Hz) +6dB (10kHz)
- LOW FILTER ..... −10dB (50Hz)
- HIGH FILTER ..... −10dB (10kHz)
- AUDIO MUTING ..... −20dB

MODEL 9090DB/990DB

- BASS ..... ±10dB (50Hz)
  - Tone selector (turnover frequency) 150, 300Hz
- MIDRANGE ..... ±5dB (1.5kHz)
- TREBLE ..... ±10dB (10kHz)
  - Tone selector (turnover frequency) 1.5, 3kHz
- LOUDNESS ..... +8dB (50Hz) +6dB (10kHz)
- LOW FILLTER ..... −10dB (50Hz)
- HIGH FILTER ..... −10dB (10kHz)
- AUDIO MUTING ..... −20dB

FM SECTION

MODEL 8080DB/890DB,9090DB/990DB

TUNING RANGE ..... 88 to 108MHz
SENSITIVITY
- (IHF) 9.8dBf (1.7μV)
- (DIN) 0.9μV

50dB QUIETING SENSITIVITY
- STEREO (IHF) 36.3dBf (36μV)
- MONO (IHF) 14.7dBf (3μV)

TOTAL HARMONIC DISTORTION
- STEREO ..... less than 0.3%
- MONO ..... less than 0.2%

SIGNAL TO NOISE RATIO (mono) ..... better than 70dB
SELECTIVITY ..... better than 85dB
CAPTURE RATIO ..... less than 1.5dB
AM SUPPRESSION ..... better than 55dB
IMAGE RESPONSE RATIO (IHF) .. better than 70dB (98MHz)
IF RESPONSE RATIO (IHF) ..... better than 95dB (98MHz)
SPURIOUS RESPONSE RATIO (IHF) ..... better than 85dB (98MHz)
SPURIOUS RADIATION ..... less than 34dB
STEREO SEPARATION ..... better than 40dB (1 kHz)
FREQUENCY RESPONSE ..... 30 to 15,000Hz $^{+0.5}_{-2.0}$dB
ANTENNA INPUT IMPEDANCE .. 75Ω unbalanced 300Ω balance

AM SECTION

TUNING RANGE ..... 535 to 1,605kHz
SENSITIVITY (Bar antenna) 50dB/m (1,000kHz)
SELECTIVITY ..... better than 50dB (1,000kHz)
IMAGE RESPONSE RATIO (IHF) .. better than 30dB (1,000kHz)
IF RESPONSE RATIO (IHF) ..... better than 30dB (1,000kHz)

OTHERS

MODEL 8080DB/890DB

POWER REQUIREMENTS
- POWER VOLTAGE ..... 100, 120, 220, 240V 50/60Hz 120V (Usable 110—130V) 60Hz (for U.S.A. & Canada only)
- POWER CONSUMPTION
  - Maximum consumption .... 420 watts
  - Rated consumption ..... 265 watts (350VA)

DEMENSIONS ..... 540mm (21-5/16") W 182mm (7-3/16") H 397mm (15-11/16") D
WEIGHT ..... 20.7kg (45.6 lbs) net 23.1kg (50.9 lbs) packed

MODEL 9090DB/990DB

POWER REQUIREMENTS
- POWER VOLTAGE ..... 100, 120, 220, 240V 50/60Hz 120V (Usable 110-130V) 60Hz (for U.S.A. & Canada only)
- POWER CONSUMPTION
  - Maximum consumption .... 650 watts
  - Rate consumption ..... 435 watts (530VA)

DEMENSIONS ..... 540mm (21-5/16") W 182mm (7-3/16") H 397mm (15-11/16") D
WEIGHT ..... 23.6kg (52.0 lbs) net 26.0kg (57.3 lbs) packed

*◦The word "Dolby" and the Double-D symbol are a trademark of Dolby Laboratories Inc.
◦Noise reduction circuit made under license from Dolby Laboratories Inc.

*Design and specifications subject to change without notice for improvements.

2. BLOCK DIAGRAM

2-1. Audio Section

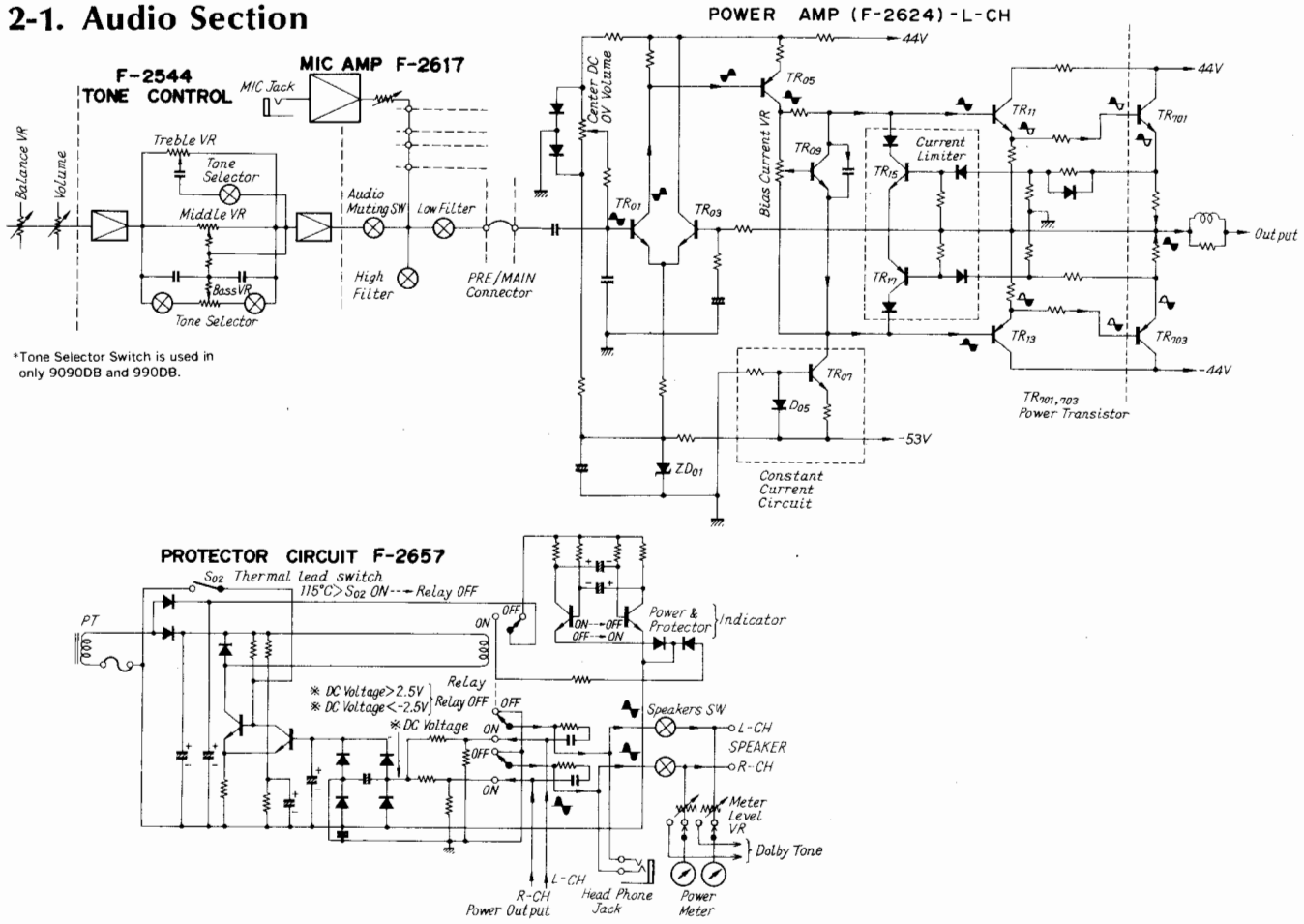

2-2. Tuner Section

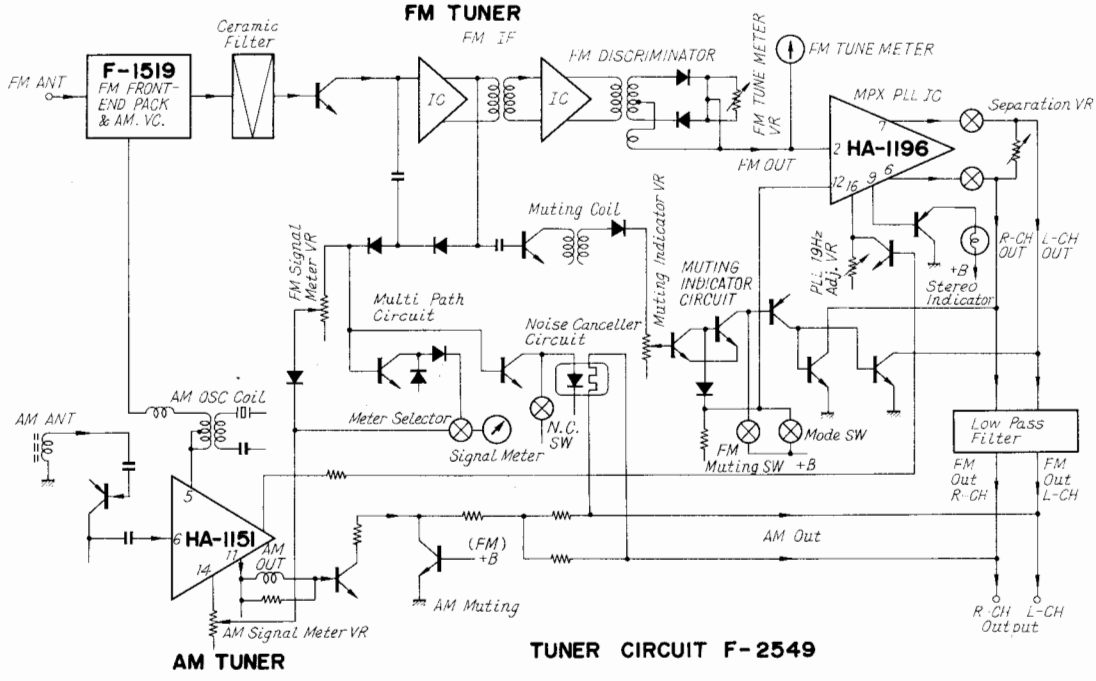

2-3. Dolby Mode Section

2-3-1. Dolby FM (Dolby NR Selector)

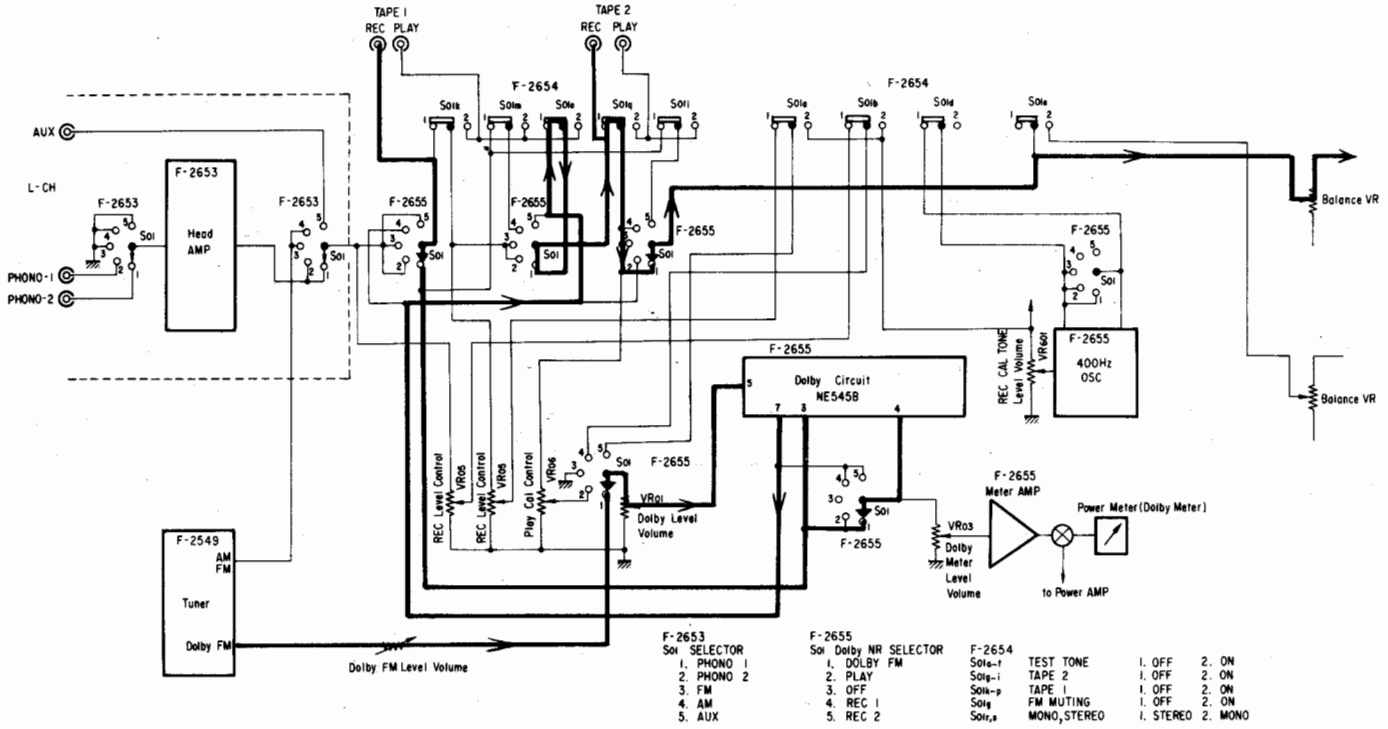

F-2653 Soi SELECTOR
1. PHONO 1
2. PHONO 2
3. FM
4. AM
5. AUX

F-2655 Soi Dolby NR SELECTOR
1. DOLBY FM
2. PLAY
3. OFF
4. REC 1
5. REC 2

F-2654			
Sole-f	TEST TONE	1. OFF	2. ON
Solg-i	TAPE 2	1. OFF	2. ON
Solk-p	TAPE 1	1. OFF	2. ON
Solg	FM MUTING	1. OFF	2. ON
Solr,s	MONO, STEREO	1. STEREO	2. MONO

2-3-2. Play (Dolby NR Selctor)

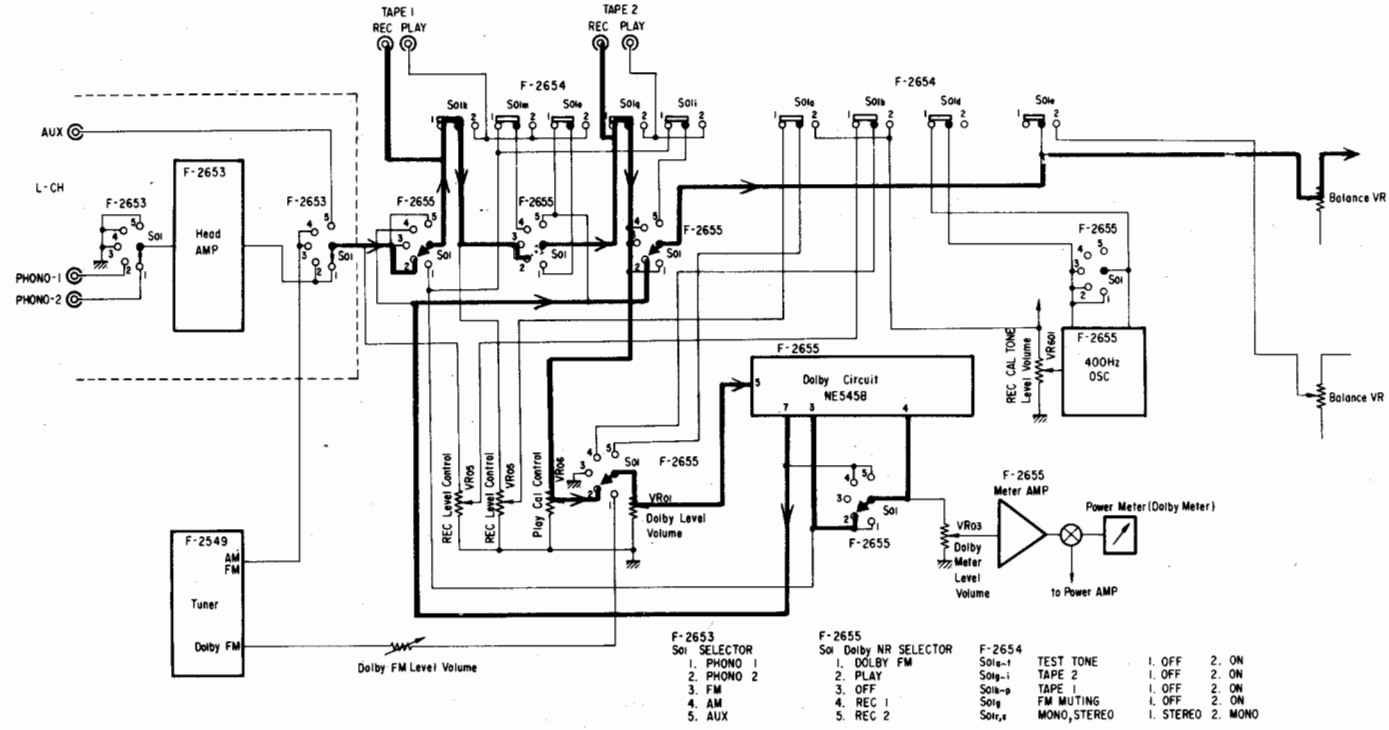

F-2653 Soi SELECTOR
1. PHONO 1
2. PHONO 2
3. FM
4. AM
5. AUX

F-2655 Soi Dolby NR SELECTOR
1. DOLBY FM
2. PLAY
3. OFF
4. REC 1
5. REC 2

F-2654			
Sole-f	TEST TONE	1. OFF	2. ON
Solg-i	TAPE 2	1. OFF	2. ON
Solk-p	TAPE 1	1. OFF	2. ON
Solg	FM MUTING	1. OFF	2. ON
Solr,s	MONO, STEREO	1. STEREO	2. MONO

2-3-3. Rec (1) (Dolby NR Selector)

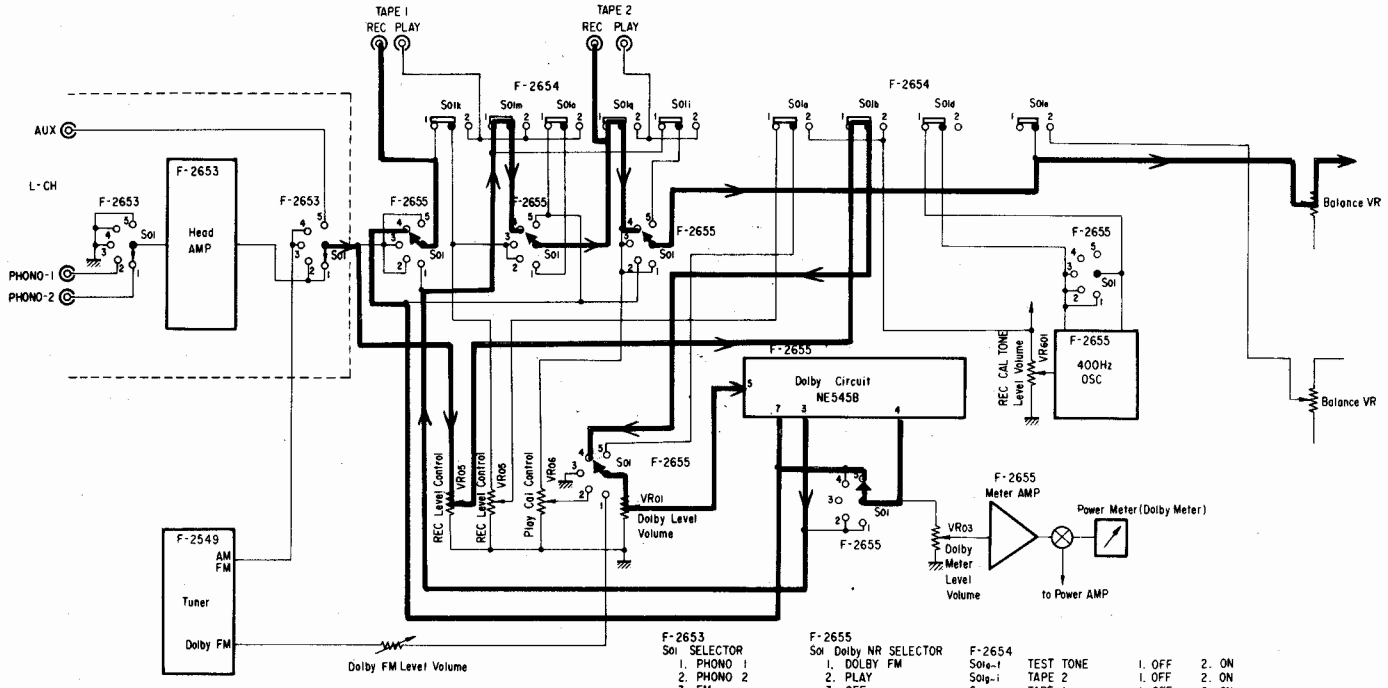

F-2653 Sol SELECTOR
1. PHONO 1
2. PHONO 2
3. FM
4. AM
5. AUX

F-2655 Sol Dolby NR SELECTOR
1. DOLBY FM
2. PLAY
3. OFF
4. REC 1
5. REC 2

F-2654			
Sole-f	TEST TONE	1. OFF	2. ON
Solg-i	TAPE 2	1. OFF	2. ON
Solk-p	TAPE 1	1. OFF	2. ON
Solg	FM MUTING	1. OFF	2. ON
Solr,s	MONO, STEREO	1. STEREO	2. MONO

2-3-4. Rec (2) (Dolby NR Selector)

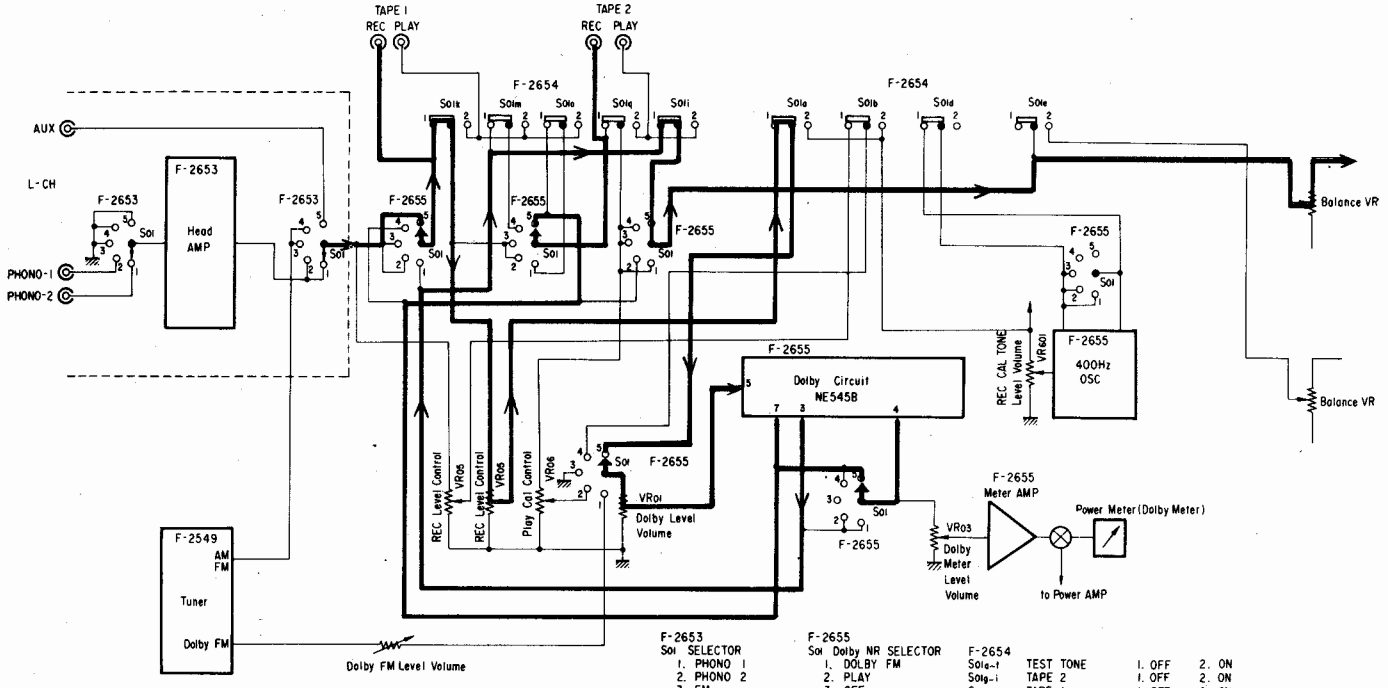

F-2653 Sol SELECTOR
1. PHONO 1
2. PHONO 2
3. FM
4. AM
5. AUX

F-2655 Sol Dolby NR SELECTOR
1. DOLBY FM
2. PLAY
3. OFF
4. REC 1
5. REC 2

F-2654			
Sole-f	TEST TONE	1. OFF	2. ON
Solg-i	TAPE 2	1. OFF	2. ON
Solk-p	TAPE 1	1. OFF	2. ON
Solg	FM MUTING	1. OFF	2. ON
Solr,s	MONO, STEREO	1. STEREO	2. MONO

3. OPERATION OF DOLBY FM SYSTEM

This Dolby Noise Reduction System Type B used in this unit is not only available for encording of the FM dolbyized signal but also useful for encording and decording of other signals. Therefore it is possible and effective to combine with other products such as a cassette deck without Dolby system.

Dolby FM System

FM broadcasting system is originally able to produce a very high quality audio performance; however, FM stereophonic broadcasting system incures a 20dB Signal-Noise ratio decrease. When Dolby B Type Noise Reduction system is used for a FM stereo, Signal-Noise ratio (S/N) is conspicuously improved and this ratio is at about 10dB.

Fig. 3-1

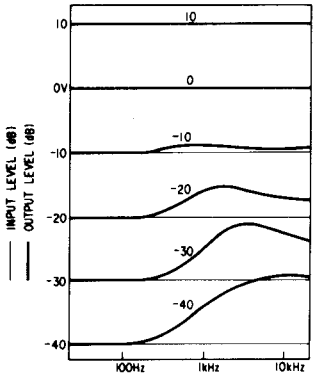

Whole range output Frequency Response characteristics against input level.

Fig. 3-2

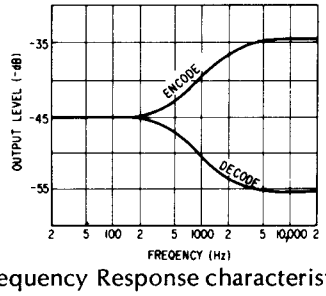

Low level Frequency Response characteristics of encode and decode processors.

Principles

The S/N of the FM becomes worse when the frequency is high and the level is low. Because of this reason, the middle and high range of the low level signal is expanded by a FM station. Then the signal will be compressed proportionally along the expanded level by a receiving side. (See Fig. 1, 2)

This unit employs a IC NE545B for a main Dolby circuit. The Operating diagram is shown in the Fig. 3-3.

Complementary items

1. When Dolby FM system is being used, the de-emphasis of FM-out is 25μs.
2. The input level of Dolby FM is at 50% modulation and $\pm$37.5kHz.
3. This unit has an own 400Hz Oscillator for Dolby Tone in order to adjust itself to the Dolby level.

Fig. 3-3 REC **Dolby IC (NE545B)**

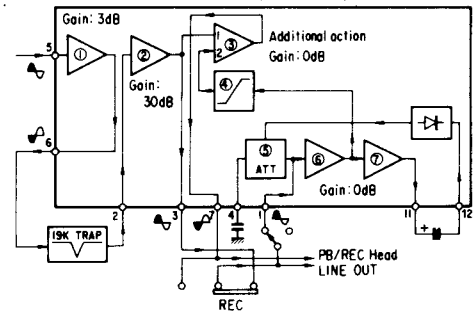

PLAY **Dolby IC (NE545B)**

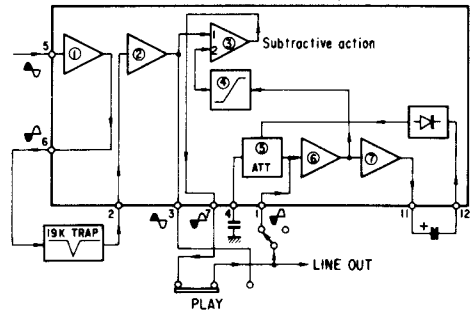

4. ADJUSTMENTS

4-1. Dolby Circuit Adjustment

4-1-1. Input Level Adjustment of Dolby IC (NE545B) (See Fig. 4-2)

Note: 1. Speaker Selector.....A
2. Master Volume .....Minimam
3. Balance Volume.....Center
4. Selector .....AUX
5. Accessory Switch .....OFF
6. REC Level Volume .....MAX
7. Dolby Selector Switch.....REC 1

STEP	SUBJECT	FEED SIGNAL		MEASURE OUTPUT	ADJUST	ADJUST FOR
		FROM	TO			
1.	L-CH	400Hz 80mV Audio OSC.	AUX Terminal	REC Terminal TAPE I VTVM	VR01 F-2655	Output 270mV
2.	R-CH	Same as above	AUX Terminal	REC Terminal TAPE I VTVM	VR02 F-2655	Same as above

4-1-2. Calibration Tone Volume & Dolby Meter Volume Adjustment (See Fig. 4-1, 4-2)

Note: 1. Speaker Selector .....A
2. Master Volume .....Minimum
3. Balance Volume .....Center
4. Accessory Switch .....OFF
5. Dolby Selector Switch .....REC 1

Step

1. Turn on the Dolby REC CAL TONE Switch.
2. Connect VTVM to the front TAPE I REC terminal.
3. Adjust VR601 on the circuit board, F-2655 to obtain 270mV on indication of VTVM.
4. Adjust both VR03 (L-CH) and VR04 (R-CH) on the circuit board, F-2655 so that indicator of power meter will be center of Dolby mark.

Fig. 4-1

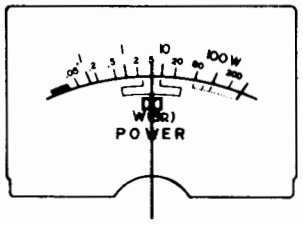

Fig. 4-2

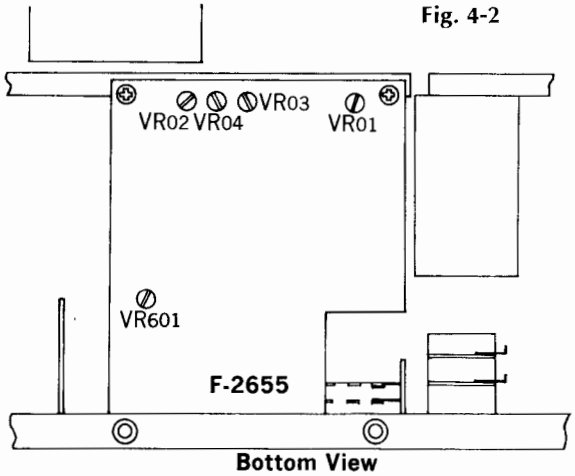

Bottom View

4-1-3. Dolby FM Volume Adjustment (See Fig. 4-3)

Note: 1. Selector.....FM Auto
2. Dolby Selector .....Dolby FM
3. REC CAL. TONE Switch.....OFF
4. Master Volume .....Min.

SUBJECT	FEED SIGNAL FROM	FEED SIGNAL TO	MEASURE OUTPUT	ADJUST	ADJUST FOR
L-CH	98MHz ANT Input 60dB FM SSG Pilot 19kHz (10% MOD) L-CH 1kHz (25% MOD) R-CH (0% MOD)	FM ANT Terminal 300Ω	REC Terminal TAPE I L-CH VTVM	VR03 F-2654	Output Level 270mV
R-CH	98MHz ANT Input 60dB FM SSG Pilot 19kHz (10% MOD) R-CH 1kHz (25% MOD) L-CH (0% MOD)	Same as above	REC Terminal TAPE I R-CH VTVM	VR02 F-2654	Same as above

Fig. 4-3

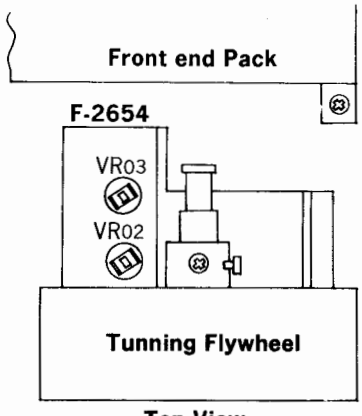

Top View

4-2. Adjustment of Audio Section

4-2-1. Power Meter Adjustment (See Fig. 4-4)

Note: 1. Input .....AUX
2. Speaker load.....8Ω
3. Input Signal .....Sine Wave (1kHz)
4. Master Volume .....Maximum
5. For adjustment, run the unit for more than 4 minutes after the power is switched ON.

STEP	MEASURE OUTPUT	LEVEL OUTPUT	ADJUST	ADJUST FOR
L-CH	Speaker Terminal L-CH AC Volt Meter	20V (50W)	VR01 F-2657	Meter Position 50W
R-CH	Speaker Terminal R-CH AC Volt Meter	Same as above	VR02 F-2657	

Fig. 4-4

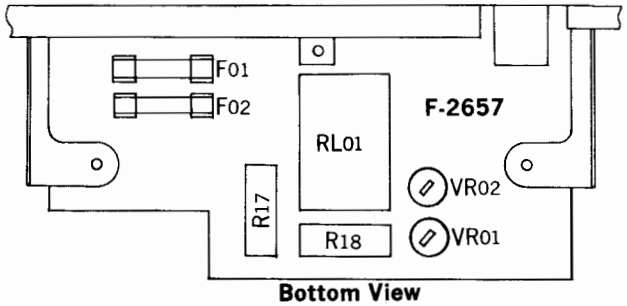

Bottom View

4-2-2. Driver Circuit Board Adjustment (See Fig 4-5, 4-6 page 8)

Note: 1. Master Volume.....Minimum
2. Before adjustment, run the unit for more than 4 minutes, then check and readjust necessary.

STEP	SUBJECT	EQUIPMENT	MEASURE OUTPUT	ADJUST	ADJUST FOR	CONDITION
1.	DC 0V L-CH	DC volt Meter	Speaker Terminal L-CH	VR01 F-2624	0V ±10mV	◦ Step down meter range accordingly. ◦ Change leads polarity if meter swings backward.
2.	DC 0V R-CH	Same as above	Speaker Terminal R-CH	VR02 F-2624	Same as above	Same as above
3.	Bias Current L-CH	DC Milliammeter	F04 F-2656	VR03 F-2624	30mA ±1mA	◦ Step down meter range accordingly
4.	Bias Current R-CH	Same as above	F05 F-2656	VR04 F-2624	Same as above	◦ Same as above

Fig. 4-5

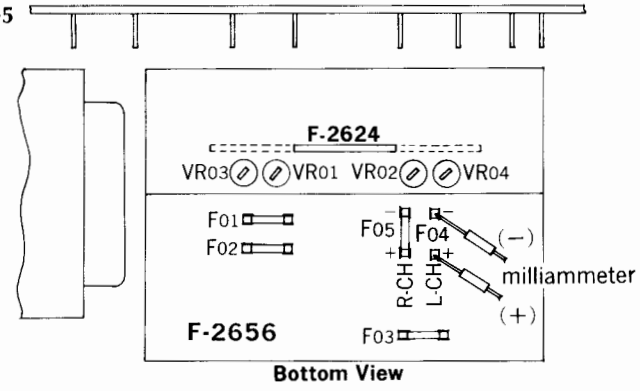

Note: In adjustment above, there are two model numbers as model Ⓐ and Ⓑ. Regarding name of model Ⓐ and Ⓑ, please refer to "Note" indicated on page 1.

Fig. 4-6

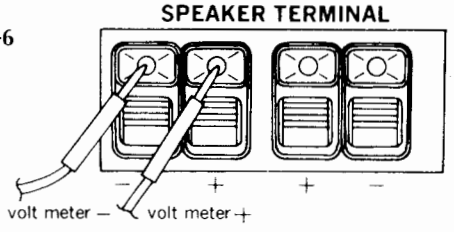

4-3. Adjustment of Tunner Section

4-3-1. FM Adjustment & Alignment

Note: 1. Selector.....FM AUTO 2. FM MUTING Switch .....OFF
Connection.....Connect the output of genescope to TP through 100pF ceramic capacitor
3. Output level of genescope.....After attenuator
Sweep width .....1.5~2cm/150kHz
Frequency band .....9.5~11.5MHz

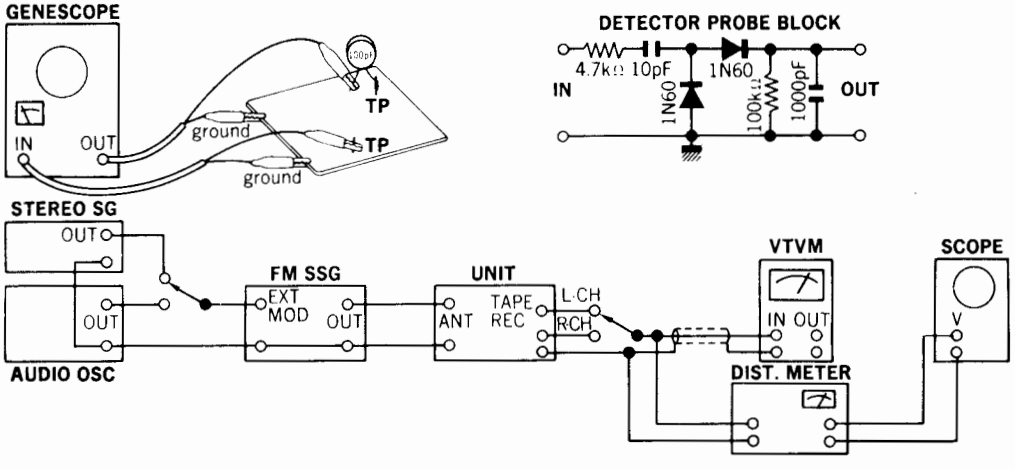

1) FM IF Adjustment & Tracking (See Fig. 4-7, 4-8, 4-9 on Page 9)

STEP	SUBJECT	FEED SIGNAL FROM	FEED SIGNAL TO	MEASURE OUTPUT	ADJUST	ADJUST FOR	CONDITION
1.	IF coil	Output 90dB Genescope	TP01 FM, AM Pack F-1519	Terminal 01 of F-2549. Use Detector Probe	L05 F-1519	Max. IF waveform	
		Output 50dB Genescope	Same as above	TP01 F-2549	T01 F-2549	Same as above	
2.	Muting Coil	Output 50dB Genescope	Same as above	TP04 F-2549	T04 F-2549	Same as above	
3.	Discriminator Coil	Output 50dB Genescope	Same as above	TP03 F-2549	T02 T03 F-2549	Max. linearity of S Curve	
4.	90MHz Dial Calibration	90MHz ANT Input 60dB 400Hz (100% MOD) FM SSG	ANT Terminal 300Ω	REC OUT L or R-CH VTVM & Scope	L06 F-1519	Max. Output	
	106MHz Dial Calibration	106MHz ANT Input 60dB 400Hz (100% MOD) FM SSG	Same as above	Same as above	TC04 F-1519	Same as above	
5.	90MHz RF Adj.	90MHz ANT Input 60dB 400Hz (100% MOD) FM SSG	Same as above	Same as above	L01, L02, L03 F-1519	Same as above	
	106MHz RF Adj.	106MHz ANT Input 60dB 400Hz (100% MOD) FM SSG	Same as above	Same as above	TC01 TC02 TC03 F-1519	Same as above	
6.	Signal Meter Volume	98MHz ANT Input 100dB 400Hz (100% MOD) FM SSG	Same as above	Signal Meter	VR02 F-2549	4.7 on meter	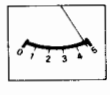
7.	Distortion	98MHz ANT Input 60dB 400Hz (100% MOD) FM SSG	Same as above	REC OUT L or R-CH Dist meter & Scope	T02 T03 } T01 } F-2549	Max. Output Min. Distortion	T01..Slightly adjust
8.	Tune Meter Volume	98MHz ANT Input 60dB 400Hz (100% MOD) FM SSG	Same as above	Tune meter	VR01 F-2549	Center on meter	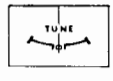

Abbreviations

Equipment			
AM FM Generator Oscilloscope	Genescope	Distortion Meter	Dist. Meter
AM Standard Signal Generator	AM SSG	**Others**	
FM Standard Signal Generator	FM SSG	Clockwise	CW.
FM Stereo Generator	Stereo SG	Counterclockwise	CCW.
Oscilloscope	Scope	Antenna	ANT.
Audio Oscillator	Audio Osc.	Modulation	MOD.

2) MPX Adjustment (See Fig. 4-8, 4-9 on page 9)

STEP	SUBJECT	FEED SIGNAL FROM	FEED SIGNAL TO	MEASURE OUTPUT	ADJUST	ADJUST FOR	CONDITION
1.	PLL VCO Adj.	98MHz ANT Input 60dB FM SSG Pilot 19kHz (10% MOD) L-CH 1kHz (45% MOD) R-CH (0% MOD) STEREO SG	ANT Terminal 300Ω	Stereo Indicator	VR04 F-2549	Light Indicator	Adjust the VR within center of lighting level.
	PLL VCO Adj. In case of using Freq Counter		Make short between TP03 of F-2549 and chassis	TP02 F-2549 Use Freq. Counter	VR04 F-2549	76kHz (±200Hz)	
2.	Separation	98MHz ANT Input 60dB FM SSG Pilot 19kHz (10% MOD) L-CH (0% MOD) R-CH 1kHz (45% MOD) STEREO SG	ANT Terminal 300Ω	REC OUT L-CH VTVM & Scope	VR05 F-2549	Min. Output − 35dB	
3.	Distortion	Same as above	Same as above	REC OUT L-CH Dist. meter & Scope	L05 1 Side 2 Side AM, FM Pack F-1519	Min. Distortion	If less than 0.3%, adjust L05 slightly.
4.	Separation	98MHz ANT Input 60dB FM SSG Pilot 19kHz (10% MOD) L-CH 1kHz (45% MOD) R-CH (0% MOD) STEREO SG	Same as above	REC OUT R-CH VTVM & Scope	VR05 F-2549	Min. Output − 30dB	
5.	Muting level & Indicator level	98MHz ANT Input 23dB FM SSG Pilot 19kHz(10%MOD) L-CH 1kHz(45% MOD) R-CH (0% MOD) STEREO SG	Same as above	Stereo Indicator	VR03 F-2549	Muting level 23dB Indicator lighting level 23dB	

4-3-2. AM IF Adjustment & Tracking (See Fig. 4-8, 4-9 on page 9)

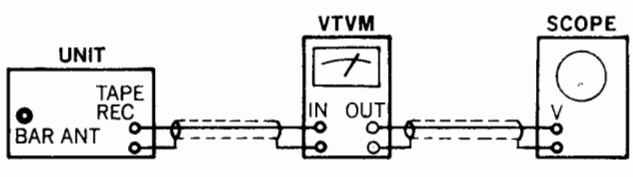

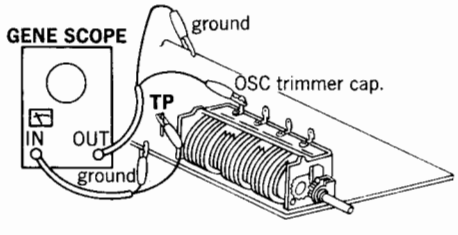

Note: 1. Selector.....AM
2. Confirm start point of dial pinter before alignment.

STEP	SUBJECT	FEED SIGNAL FROM	FEED SIGNAL TO	MEASURE OUTPUT	ADJUST	ADJUST FOR	CONDITION
1.	IF Coil	Genescope Output 70dB	TC05 FM, AM Pack F-1519	TP06 F-2549	CF04 F-2549	Max. Output	
2.	600kHz Dial Calibration	600kHz ANT Input 60dB 400Hz (MOD 30%) AM SSG	AM ANT Terminal	REC OCT L or R-CH VTVM & Scope	T05 F-2549	Same as above	
	1400kHz Dial Calibration	1400kHz ANT Input 60dB 400Hz (MOD 30%) AM SSG	Same as above	Same as above	TC05 FM, AM Pack F-1519	Same as above	
3.	600kHz RF Adj.	600kHz ANT Input 50dB 400Hz (MOD 30%) AM SSG	Same as above	Same as above	Bar Antenna T702	Same as above	
	1400kHz RF Adj.	1400kHz ANT Input 50dB 400Hz (MOD 30%) AM SSG	Same as above	Same as above	TC06 FM, AM Pack F-1519	Same as above	
4.	Signal Meter	1000kHz ANT Input 80dB	Same as above	Signal Meter	VR06 F-2549	4.3 on meter	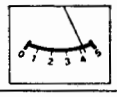

Fig. 4-7

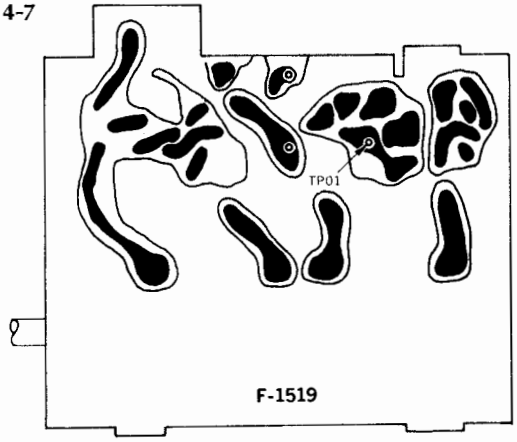

Fig. 4-8

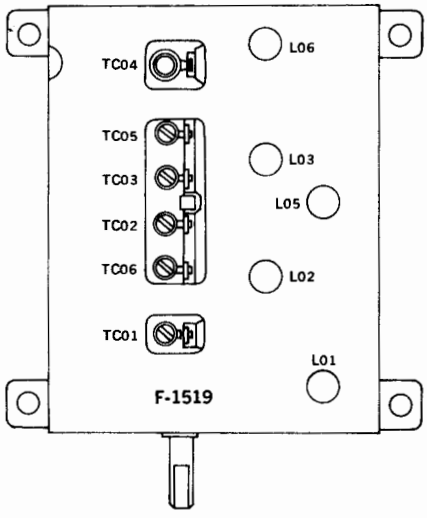

Fig. 4-9

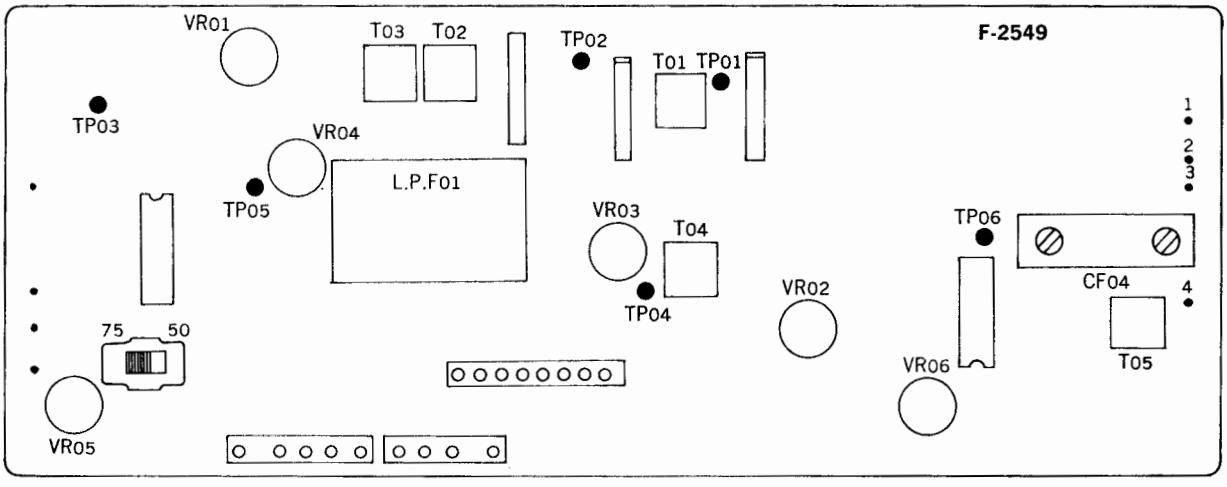

5. PARTS LOCATION AND PARTS LIST

Since some of capacitors and resistors are omitted from parts lists in this Service Manual, refer to the common parts list for capacitors & resistors which was appended previously to each Service Manual.

5-1. F-2549 AM, FM Tuner Circuit Board

(Stock No. 7521401 MODEL 8080DB/8090DB) (Stock No. 7521391 MODEL 9090DB/990DB)

Conductor Side

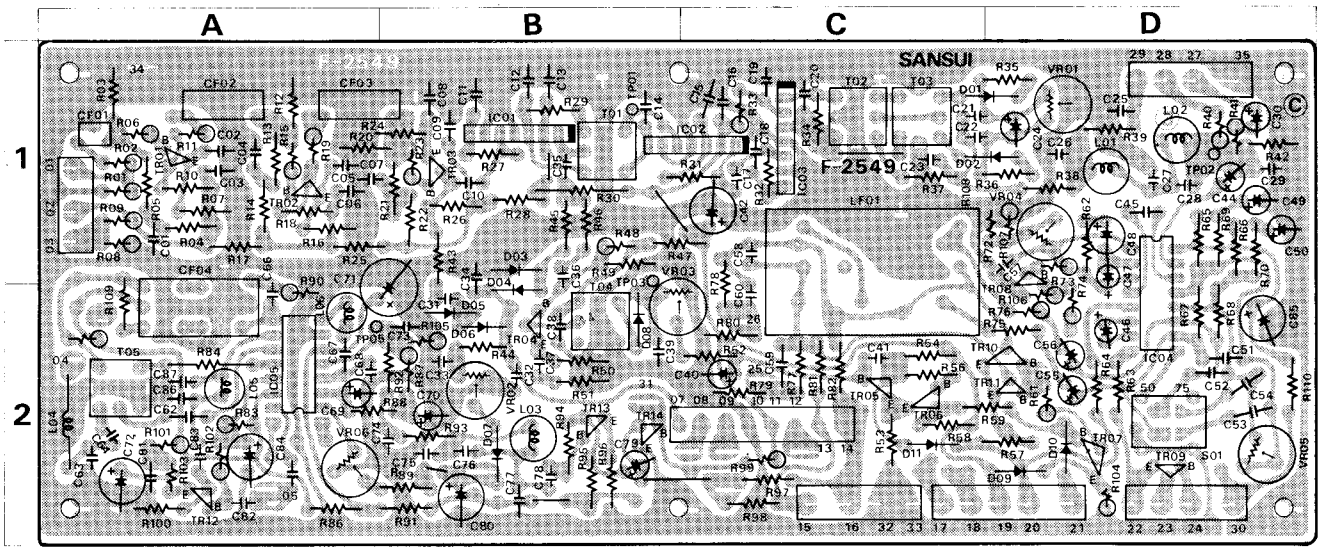

Parts List

Parts No.	Stock No.	Description		Position
TR01	0306113	3SC738 (D)	Transistor	1 A
TR02	0306113	2SC738 (D)		1 A
TR03	0306112, 3	2SC738 (C, D)		1 B
TR04	0306112, 3	2SC738 (C, D)		2 B
TR05	0305731, 2	2SC711 (E, F)		2 C
TR06	0305731, 2	2SC711 (E, F)		2 C
TR07	0300281, 2	2SA628 (D, E)		2 D
TR08	0305731, 2	2SC711 (E, F)		1 D
TR09	0300220, 1	2SA562 (O, Y)		2 D
TR10, 11	0306390, 1	2SC1636-1, 2		2 D
TR12	0300281	2SA628 (D)		2 A
TR13	0306091	2SC1312R (G)		2 B
TR14	0306390, 1	2SC1636-1, 2		2 B
IC01	0360120	μPC555H	IC	2 B
IC02	0360120	μPC555H		1 B, C
IC03	0360120	μPC555H		1 C
IC04	0360320	HA1196		1, 2 D
IC05	0360150	HA1151		2 A
D01	0311060	1N60-P	Diode	1 C, D
D02	0311060	1N60-P		1 C, D
D03	0310330, 1	1N60		1 B
D04	0310330, 1	1N60		2 B
D05	0310330, 1	1N60		2 B
D06	0310330, 1	1N60		2 B
D07	0310330, 1	1N60		2 B

Parts No.	Stock No.	Description			Position
D08	0310330, 1	1N60	Diode		2 B
D09	0311160 / 0311180	1S2473D / 1S1588			2 D
D10	0311160 / 0311180	1S2473D / 1S1588			2 D
D11	0311160 / 0311180	1S2473D / 1S1588			2 C
C26	0620181	180pF			1 D
C27	0620331	330pF	50V	P.C.	1 D
C28	0620101	100pF			1 D
C29	0620151	150pF			1 D
C44	0573688	0.68μF	35V	T.C.	1 D
C53, 54	0620511	510pF	50V	P.C.	2 D
C57	0629005	360pF			1 D
C63	0669400	15pF			2 A
C64	0620361	360pF	50V	C.C.	2 A
C86	0661150	15pF			2 A
C87	0661150	15pF			2 A
L01	4900250	Inductor			1 D
L02	4900240				1 D
L03	4900220				2 B
L04	4290011				2 A
L05	4900110	Inductor			2 A
L06	4900110				2 A

Parts No.	Stock No.	Description		Position
T01	4235860	FM IF Coil		1 B
T02	4235750			1 C
T03	4235760			1 C
T04	4235940			2 B
T05	4220550			2 A
CF01	0910150	Ceramic Filter		1 A
CF02	0910330			1 A
CF03	0910330			1 A
CF04	0910310			2 A
LF01	0910360	Low Pass Filter		1, 2 C
VR01	1035150	22kΩ (B)	Volume	1 D
VR02	1035170	47kΩ (B)		2 B
VR03	1035170	47kΩ (B)		2 B, C
VR04	1034250	4.7kΩ (B)		1 D
VR05	1035210	220kΩ (B)		2 D
VR06	1035110	4.7kΩ (B)		1 A
S01	1110270	Slide Switch		
	0990010	Ceramic Filter		
	2410570	5P Pin Ass'y Type D		
	2410580	3P Pin Ass'y Type D		
	2410590	4P Pin Ass'y Type D		

5-2. F-2627 Illumination Circuit Board (Stock No. 7594211 MODEL 8080DB/890DB) (Stock No. 7594301 MODEL 9090DB/990DB)

Conductor Side

Parts List

Parts No.	Stock No.	Description
R01	0191180	18Ω 1/4W Fuse R
PL01-04	0420040	7V 320MA Pilot Lamp

5-3. F-1519 Front-end Pack (Stock No. 7510631)

Conductor Side

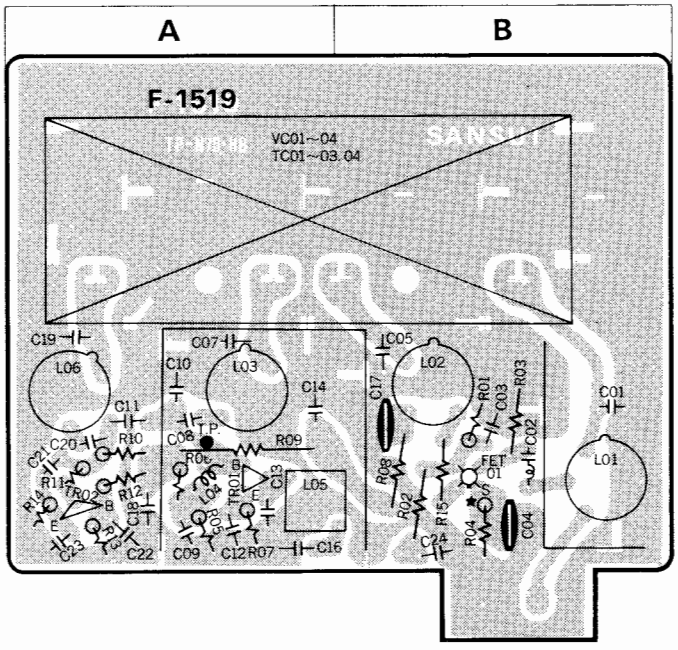

Parts List

Parts No.	Stock No.	Description	Position
TR01	0305800, 1	2SC1047 (A, B) } Transistor	A
TR02	0305790, 1	2SC930 (C, D) } Transistor	A
FET01	0370131, 2	3SK41 (K, L) FET	B
L01	4200640	Antenna Coil	B
L02	4210330	RF Coil (1)	B
L03	4210220	RF Coil (2)	A
L04	4290110	Choke Coil	A
L05	4235910	IF Coil	A, B
L06	4220430	OSC Coil	A
VC01~04 / TC01~03	1220130	FM, AM Variable Capacitor	A, B
TC04	1230090	FM OSC Trimmer	A, B

Parts No.	Stock No.	Description	Position
C01	0669342	5.6pF	B
C02	0657102	1000pF	B
C03	0657223	0.022μF 50V C.C.	B
C04	0659015	2200pF	B
C05	0669345	10pF	B
C06	0679023	0.39pF 500V Gimmick Capacitor	B
C07	0669345	10pF	A
C08	0669210	10pF	A
C09	0657102	1000pF	A
C10	0661220	22pF	A
C11	0669202	2.2pF	A
C12	0657223	0.022μF 50V C.C.	A
C13	0660121	120pF	A
C14	0657223	0.022μF	A
C16	0660331	330pF	A
C17	0659015	2200pF	B
C18	0657223	0.022μF	A
C19	0669375	15pF	A
C20	0657102	1000pF	A
C21	0669209	8.2pF	A
C22	0657223	0.022μF 50V C.C.	A
C23	0661220 / 0669221	22pF	A
C24	0657223	0.022μF	B
R01	0106105	1MΩ ¼W C.R.(E.L.R.)	B
R02	0113104	100kΩ ¼W S.R.	B
R03	0113104	100kΩ ¼W S.R.	B
R04	0106101	100Ω (3SK41(1)K)	B
	0106680	68Ω (3SK41(1)L)	
R05	0106682	6.8kΩ ¼W C.R.(E.L.R.)	A
R06	0106123	12kΩ	A
R07	0106392	3.9kΩ	A
R08	0113121	120Ω ¼W S.R.	B
R09	0113271	270Ω ¼W S.R.	A
R10	0106392	3.9kΩ	A
R11	0106121	120Ω	A
R12	0106682	6.8kΩ ¼W C.R.	A
R13	0106222	2.2kΩ	A
R14	0106182	1.8kΩ	A
R15	0113680	68Ω ¼W S.R.	B
	2260010	Test Pin	

5-4. F-2653 Equalizer Circuit Board (Stock No. 7550971 MODEL 8080DB/890DB) (Stock No. 7551001 MODEL 9090DB/990DB)

Conductor Side

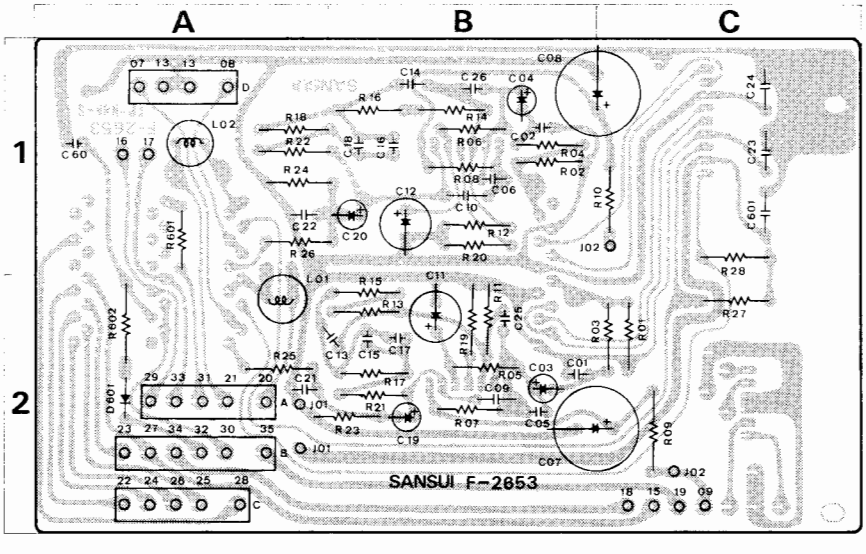

Parts List

Parts No.	Stock No.	Description	Position
IC01, 02	0360190	BA312 IC	
D601	0311160 / 0311180	1S2473D / 1S1588 Diode	2A
C03, 04	0573339	3.3μF 35V T.C.	2B, 1B
C13, 14	0625472	4700pF	2B, 1B
C15, 16	0625102	1000pF 50V P.C.	2B, 1B
C17, 18	0620361	360pF	2B, 1B
R13, 14	0231564	560kΩ ½W M.R.	2B, 1B
R17, 18	0231563	56kΩ ½W M.R.	2B, 1B
L01, 02	4900090	Inductor	2A, 1A
S01	1104350	Rotaly Switch	
	2410570	5P Pin Ass'y Type D	
	2410590	4P Pin Ass'y Type D	
	2410600	6P Pin Ass'y Type D	

5-5. F-2624 Driver Circuit Board (Stock No. 7571431 MODEL 8080DB/890DB) (Stock No. 7571461 MODEL 9090DB/990DB)

Conductor Side

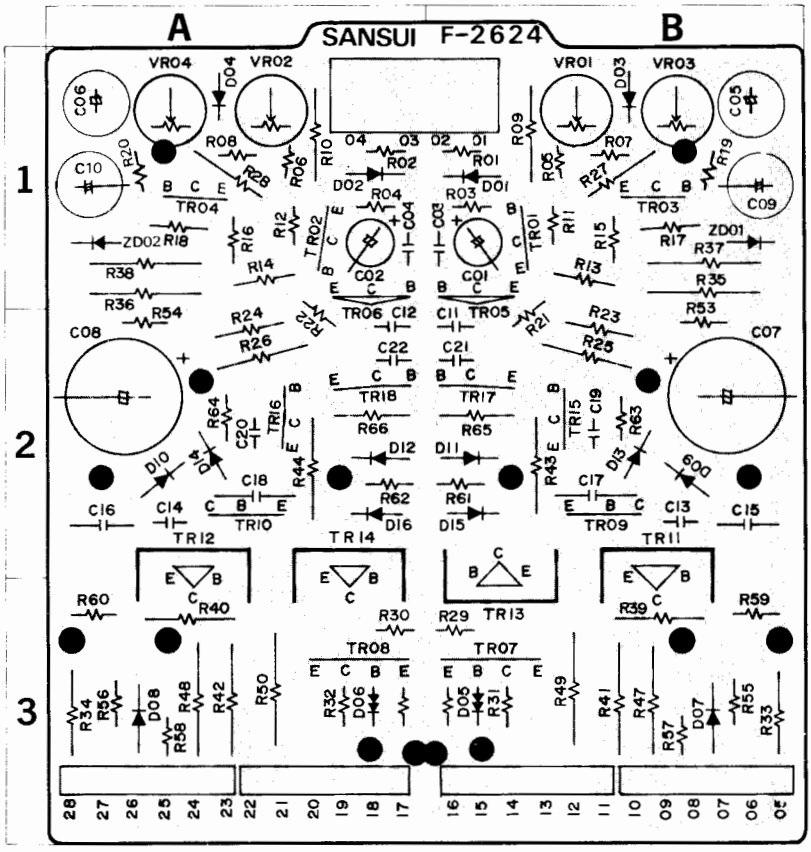

Parts List

Parts No.	Stock No.	Description	Position
TR01	0306290, 1	2SC1400 (E, U)	1 B
TR03	0306290, 1	2SC1400 (E, U)	1 B
TR05, 06	0300791, 2	2SA899 (B, V)	1 B, 1 A
TR07, 08	0306401, 2	2SC1904 (B, V) Transistor	3 B, 3 A
TR09, 10	0305871, 2	2SC984 (B, C)	2 B, 2 A
TR15, 16	0305951, 2	2SC945 (Q, P)	2 B, 2 A
TR17, 18	0300510, 1	2SA733 (P, Q)	2 B, 2 A
D01, 02	0311160 / 0311180	1S2473D / 1S1588 Diode	1 B, 1 A
D03, 04	0311160 / 0311180	1S2473D / 1S1588 Diode	1 B, 1 A
D05, 06	0340120	VD1212 Varistor	3 B, 3 A
D07, 08	0311160 / 0311180	1S2473D / 1S1588 Diode	3 B, 3 A
D09, 10	0311160 / 0311180	1S2473D / 1S1588 Diode	2 B, 2 A
D11, 12	0311160 / 0311180	1S2473D / 1S1588 Diode	2 B, 2 A
D13, 14	0311160 / 0311180	1S2473D / 1S1588 Diode	2 B, 2 A
D15, 16	0311160 / 0311180	1S2473D / 1S1588 Diode	2 B, 2 A
ZD01, 02	0316070	EQA01-24R Zener Diode	1 B, 1 A
R33, 34	0191181	180Ω ¼W Fuse R.	3 B, 3 A
R35, 36	0191479	4.7Ω ¼W Fuse R.	1 B, 1 A
R37, 38	0210392	3.9kΩ ½W M.R.	1 B, 1 A
R39, 40	0192100	10Ω ½W Fuse R.	3 B, 3 A
R41, 42	0192151	150Ω ½W Fuse R.	3 B, 3 A
R43, 44	0192151	150Ω ½W Fuse R.	2 B, 2 A
R47, 48	0192479	4.7Ω ½W Fuse R.	3 B, 3 A
R49, 50	0192479	4.7Ω ½W Fuse R.	3 B, 3 A
VR01, 02	1035350	4.7kΩ (B) Volume	1 B, 1 A
VR03, 04	1035310	1kΩ (B) Volume	1 B, 1 A
	2410930	4P Pin Ass'y Type E	
	2420520	6P Connector Ass'y Type A	
MODEL 8080DB/890DB Only			
TR11, 12	0308431, 2	2SD381 M, L Transistor	2 B, 1 A
TR13, 14	0303260, 1	2SB536 N, M Transistor	2 B, 1 A
MODEL 9090DB/990DB Only			
TR11, 12	0308531, 2	2SD381 (2) M, L Transistor	2 B, 1 A
TR13, 14	0303271, 2	2SB536 (2) M, L Transistor	2 B, 1 A

5-6. F-2544 Tone Control Circuit Board (Stock No. 7561511 MODEL 8080DB/890DB) (Stock No. 7561551 MODEL 9090DB/990DB)

Conductor Side

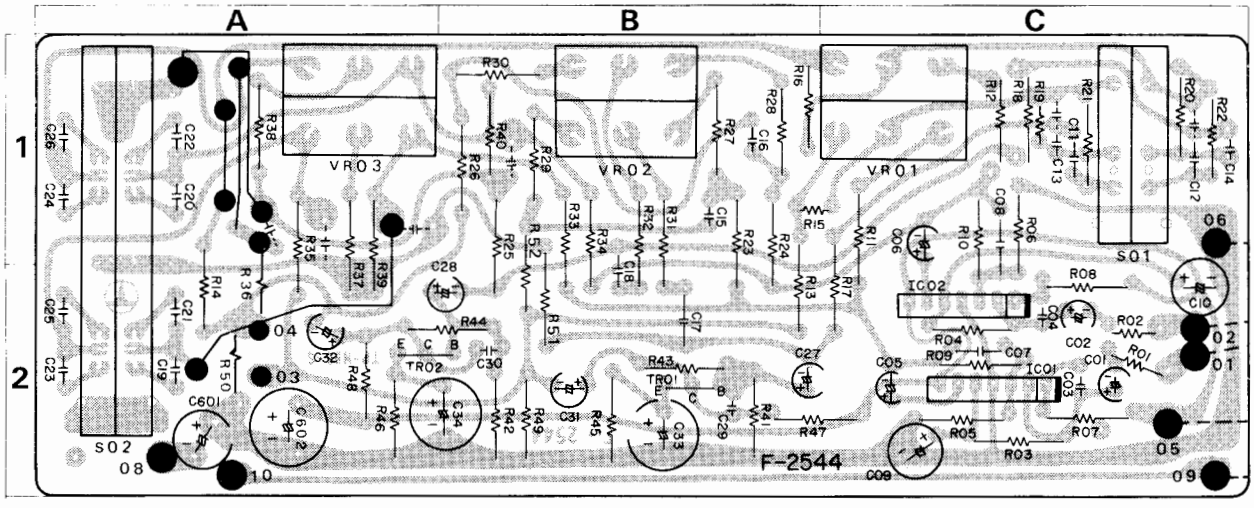

Parts List

Parts No.	Stock No.	Description	Position
TR01, 02	0306070-2	2SC1313 (F, G, H) Transistor	2 C, 2 A
IC01, 02	0360190	BA312 IC	2 C
C01, 02	0573109	1.0μF 35V T.C.	2 C
C27, 28	0573229	2.2μF 35V T.C.	2 B

Parts No.	Stock No.	Description	Position
VR01	1010930, 1	100kΩ (B) Volume	1 C
VR02	1010930, 1	100kΩ (B) Volume	1 B
MODEL 9090DB/990DB Only			
S01	1171240	Lever Switch	1 C
S02	1171220	Lever Switch	1, 2 A

5-7. F2617 Mic AMP. Circuit Board (Stock No. 7610111 MODEL 8080DB/890DB) (Stock No. 7610121 MODEL 9090DB/990DB)

Conductor Side

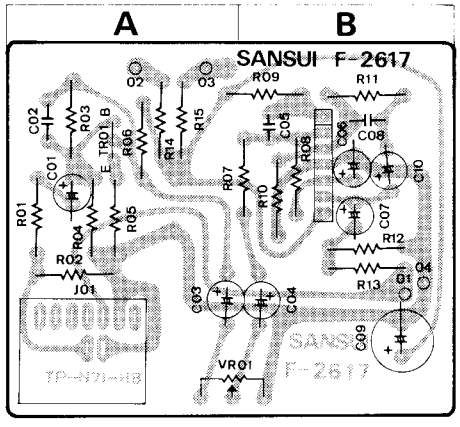

Parts List

Parts No.	Stock No.	Description	Position
TR01	0306070-2	2SC1313 (F, G, H) Transistor	A
IC01	0360190	BA312 IC	
C01	0573687	0.068μF 25V T.C.	A
VR01	1005290, 1	20kΩ Volume	A, B
J01	2430240	Mic Jack	A
MODEL 9090DB/990DB Only			
C08	0620561	560pF 50V P.C.	B

5-8. F-2619 Power Supply Circuit Board of RF Section (Stock No. 7501921 MODEL 8080DB/890DB) (Stock No. 7501991 MODEL 9090DB/990DB)

Conductor Side

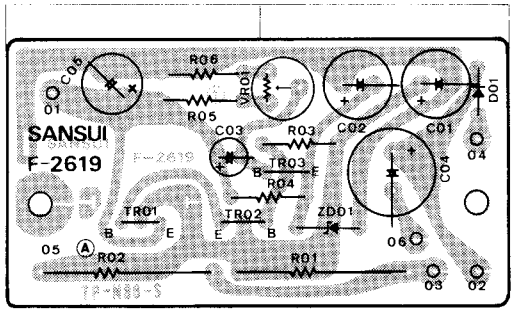

Parts List

Parts No.	Stock No.	Description	Position
TR01	0308391-3	2SD313 (D, E, F) } Transistor	A
TR02	0305930, 1	2SC1211 (C, D) } Transistor	A
TR03	0306131, 2	2SC1364 (6, 7) } Transistor	B
D01	0310340	10D1 Diode	B
ZD01	0315760	EQA01-06R Zener Diode	B
R01	0133330	33Ω } 3 W Ce.R.	B
R02	0133330	33Ω } 3 W Ce.R.	A
VR01	1035130	10kΩ (B) Volume	B

5-9. F-2657 Power Relay Circuit Board (Stock No. 7501901 MODEL 8080DB/890DB) (Stock No. 7501971 MODEL 9090DB/990DB)

Conductor Side

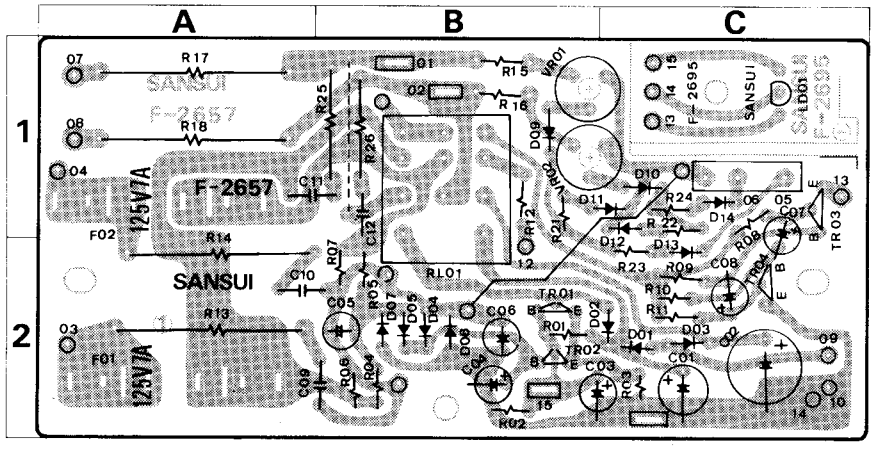

Parts List

Parts No.	Stock No.	Description	Position
TR01	0305953	2SC945 (K) } Transistor	2B
TR02	0305951-3	2SC945 (Q, P, K) } Transistor	2B
TR03, 04	0305952, 3	2SC945 (P, K) } Transistor	1C, 2C
D01	0310340	10D1 } Diode	2C
D02	0310340	10D1 } Diode	2C
D03	0310340	10D1 } Diode	2C
D04	0310330, 1	1N60 } Diode	2B
D05	0310330, 1	1N60 } Diode	2B
D06	0310330, 1	1N60 } Diode	2B
D07	0310330, 1	1N60 } Diode	2B
D09, 10	0310970	1N60P } Diode	1B, 1C
	0311060	1N60-P } Diode	
D11, 12	0311160	1S2473D } Diode	1C, 2C
	0311180	1S1588 } Diode	
D13, 14	0310970	1N60P } Diode	2C, 1C
	0311060	1N60-P } Diode	
R13, 14	0192479	4.7Ω ½W Fuse R.	2A
R15, 16	0201101	100Ω 1W M.R.	1B
R17, 18	0135221	220Ω 5W Ce.R.	1A
R25, 26	0203100	10Ω 3W M.R.	1B
RL01	1150390	Relay	1B
VR01, 02	1035350	4.7kΩ (B) Volume	1B
FO1, 02	0432500	7A 125V Speaker Fuse	2A, 1A

5-10. F-2656 Power Supply Circuit Board (Stock No. 7501911 MODEL/890DB) (Stock No. 7501981 MODEL/990DB)

Conductor Side

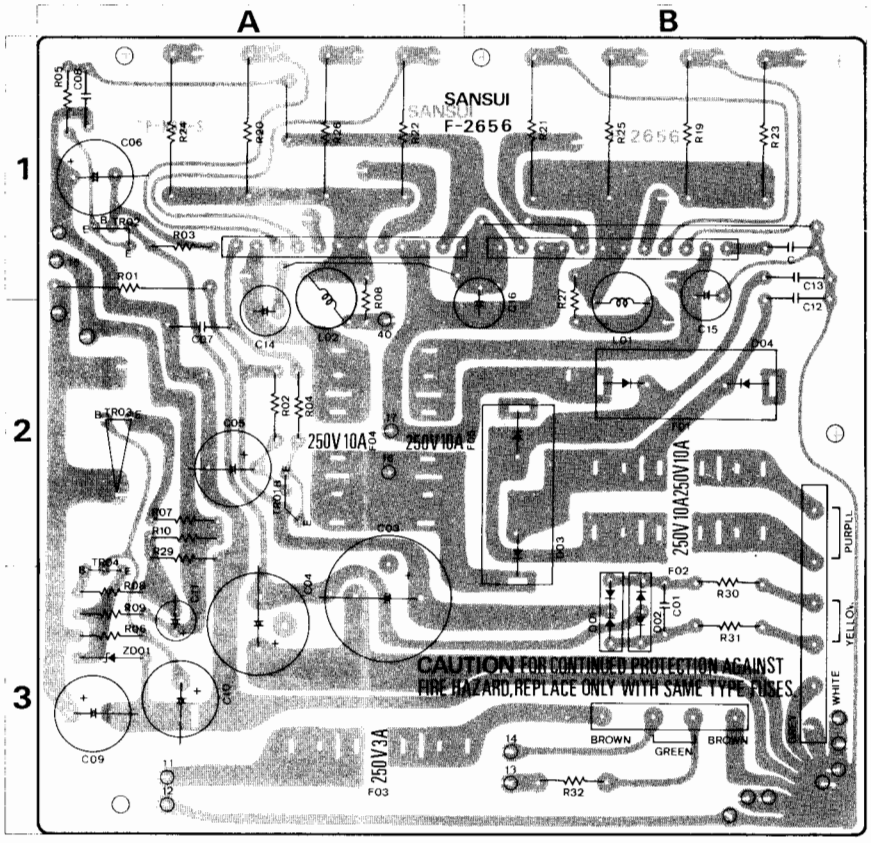

Parts List

Parts No.	Stock No.	Description	Position
TR01	0306171, 2 / 0308520, 1	2SC1509 (Q, R) / 2SD438 (D, E) Transistor	2A
TR02	0300591, 2 / 0303360, 1	2SA777 (Q, R) / 2SB560 (D, E) Transistor	1A
TR03	0306351, 2 / 0308551, 2	2SC1024 (D, E) / 2SD315V10 (D, E) Transistor	
TR04	0305930, 1	2SC1211 (C, D) Transistor	3A
D01	0310800	10DC2 Diode	3B
D02	0310801	10DC2R Diode	3B
D03	0311310	SS-5 Diode	2B
D04	0311320	SS-5R Diode	2B
ZD01	0315970	EQA01-13R Zener Diode	3A
C01	0655103	10000pF 500V C.C.	3B
C03	0549302	1000/rF 80V E.R.	3A
C04	0549301	470/rF 80V E.R.	3A
C07, 08	0655103	10000pF 500V C.C.	2A, 1A
C12, 13	0655103	10000pF 500V C.C.	1B
R01	0135560	56Ω	1A
R19, 20	0135338	0.33Ω 5W Ce.R.	1B, 1A
R21, 22	0135338	0.33Ω 5W Ce.R.	1B, 1A
R27, 28	0103479	4.7Ω 1/2W C.R.	1B, 1A
R30, 31	0192109	1.0Ω 1/2W Fuse.R.	3B
R32	0192109	1.0Ω 1/2W Fuse.R.	3B
L01, 02	4290210	Filter Coil	1, 2A B
F03	0432260	3A 250V AC Fuse	3A
	2410730	6P Pin Ass'y Type A	
	2410950	6P Pin Ass'y Type E	
	2420510	4P Connector Ass'y Type A	
MODEL 8080DB/890DB Only			
F01, 02	0432500	7A 125V AC Fuse	
F04, 05	0432500	7A 125V Q.A. Fuse	
MODEL 9090DB/990DB Only			
R23, 24	0135338	0.33Ω 5W Ce.R.	1B, 1A
R25, 26	0135338	0.33Ω 5W Ce.R.	1B, 1A
F01, 02	0431320	10A 250V AC Fuse	
F04, 05	0431320	10A 250V Q.A. Fuse	

5-11. F-2684 Connector Circuit Board (C)

(Stock No. 7594491 MODEL 8080DB/890DB) (Stock No. 7594441 MODEL 9090DB/990DB)

Parts List

Parts No.	Stock No.	Description
	2411030	6P Mini Pin Ass'y
	2411150	6P Mini Pin Ass'y

5-12. F-2682 Connector Circuit Board (A)

(Stock No. 7594471 MODEL 8080DB/890DB) (StockNo. 7594451 MODEL 9090DB/990DB)

Parts List

Parts No.	Stock No.	Description
	2411180	9P Mini Pin Ass'y

5-13. F-2683 Connector Circuit Board (B)

(Stock No. 7594481 MODEL 8080DB/890DB) (Stock No. 7594461 MODEL 9090DB/990DB)

Parts List

Parts No.	Stock No.	Description
	2411150	6P Mini Pin Ass'y MODEL 8080DB only

5-14. F-2692 Connector Circuit Board

(Stock No. 7594881 MODEL 8080DB/890DB) (Stock No. 7594871 MODEL 9090DB/990DB)

5-15. F-2695 LED Ass'y Circuit Board

(Stock No. 7594621 MODEL 8080DB/890DB) (Stock No. 7594611 MODEL 9090DB/990DB)

Parts List

Parts No.	Stock No.	Description
LD01	0319040	GL-40RG8 LED

Abbreviations

C.R.	: Carbon Resistor	N.I.R.	: Non-Inflammable Resistor	C.C.	: Ceramic Capacitor
S.R.	: Solid Resistor	M.C.	: Mylar Capacitor	Mi.C.	: Mica Capacitor
Ce.R.	: Cement Resistor	E.C.	: Electrolytic Capacitor	O.C.	: Oil Capacitor
M.R.	: Metallized Film Resistor	BP.E.C.	: Bi-Polar Electrolytic Capacitor	P.C.	: Polystyrene Capacitor
F.R.	: Fusing Resistor			T.C.	: Tantalum Capacitor

5-16. F-2654 Push Switch Circuit Board (Stock No. 7594181 MODEL 8080DB/890DB) (Stock No. 7594271 MODEL 9090DB/990DB)

Conductor Side

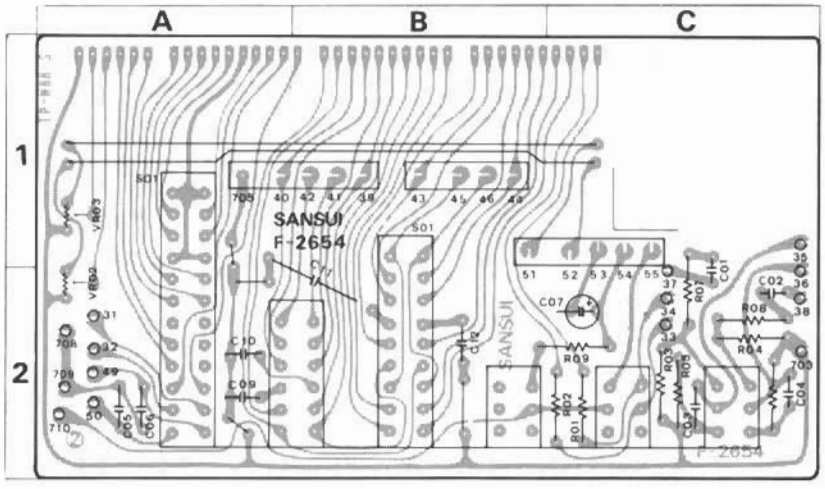

Parts List

Parts No.	Stock No.	Description
C01, 02	0620331	330pF 50V P.C.
S01	1131380	Push Switch
	2410570	5P Pin Ass'y Type D
	2410590	4P Pin Ass'y Type D
	2410690	5P Pin Ass'y Type F

5-17. F-2655 Dolby NR Circuit Board (Stock No. 7660041 MODEL 8080DB/890DB) (Stock No. 7660051 MODEL 9090DB/990DB)

Conductor Side

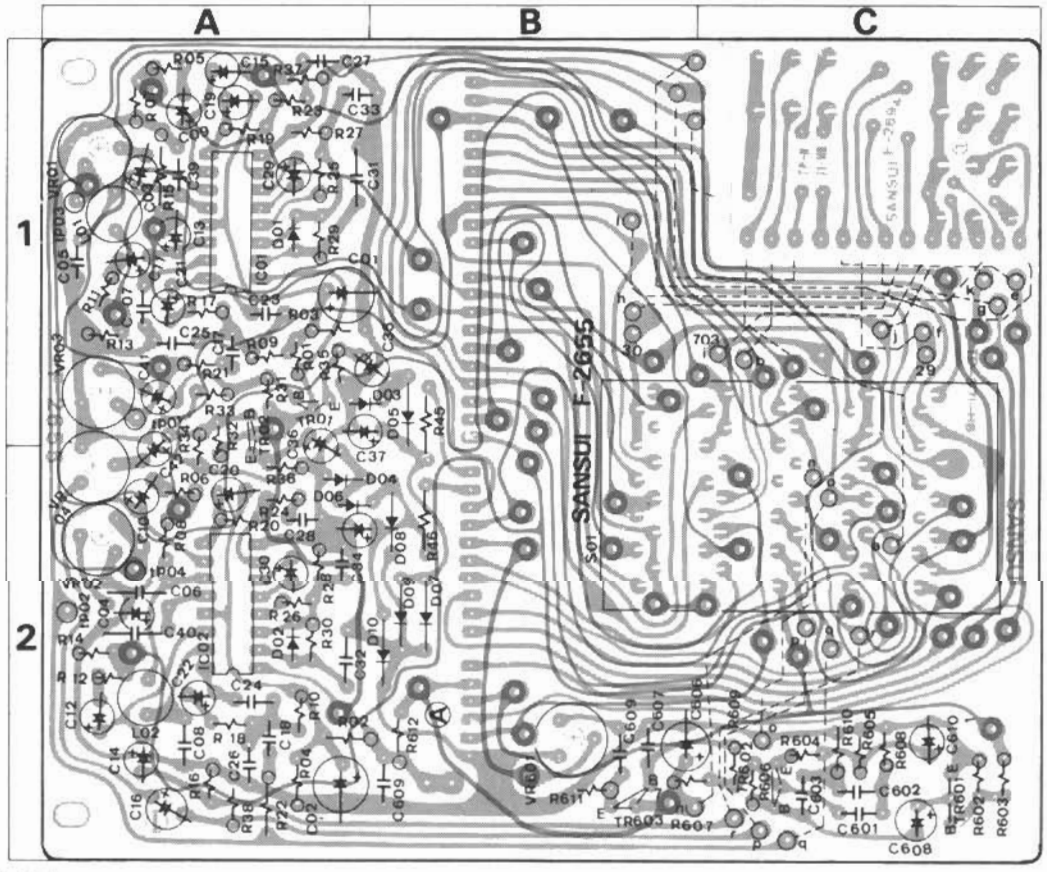

Parts List

Parts No.	Stock No.		Description	Position
TR01, 02	0305951, 2	2SC945 (Q, P)	Transistor	1A
TR601	0305951, 2	2SC945 (Q, P)	Transistor	2C
TR602	0305951, 2	2SC945 (Q, P)	Transistor	2C
TR603	0305951, 2	2SC945 (Q, P)	Transistor	2B
IC01, 02	0360340	NE545B	IC	1A, 2A
D01, 02	0310403	1N34A	Diode	1A, 2A
D03	0310970	1N60P	Diode	1A, B
	0311060	1N60-P	Diode	
D05	0310970	1N60P	Diode	1B
	0311060	1N60-P	Diode	
D07, 08	0310970	1N60P	Diode	2B
	3011060	1N60-P	Diode	
D09, 10	0310970	1N60P	Diode	2B
	0311060	1N60-P	Diode	
C03, 04	0573109	1μF 35V	T.C.	1A, 2A
L01, 02	4900260	Inductor		1A, 2A
VR01, 02	1035190	100kΩ (B)	S.R.	1A, 2A
VR03, 04	1035170	47kΩ (B)	S.R.	1A, 2A
VR05	1065051	47kΩ (B)	Volume	
VR06	1015221	47kΩ (B)	Volume	
VR601	1035170	47kΩ (B)	Volume	2B
S01	1105220	Rotary Switch		2C

5-18. F-2623 Filter Circuit Board (Stock No. 7594201 MODEL 8080DB/890DB) (Stock No. 7594291 MODEL 9090DB/990DB)

Conductor Side

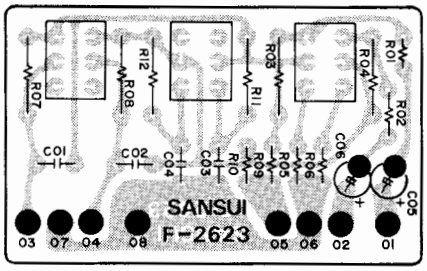

Parts List

Parts No.	Stock No.	Description
S01	1131170	Push Switch
	2410590	4P Pin Ass'y Type D

5-19. F-2693 Push Switch Circuit Board (Stock No. 7594841 MODEL 8080DB/890DB) (Stock No. 7594831 MODEL 9090DB/990DB)

Conductor Side

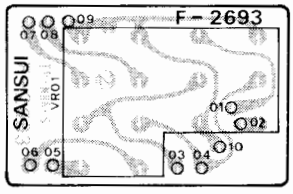

Parts List

Parts No.	Stock No.	Description
VR01	1060320, 1	250kΩ M.N (B)×2 Volume

5-20. F-2694 Dolby Volume Circuit Board (Stock No. 7594861 MODEL 8080DB/890DB) (Stock No. 7594851 MODEL 9090DB/990DB)

Conductor Side

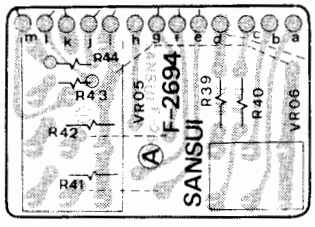

Parts List

Parts No.	Stock No.	Description
VR05	1065060	500kΩ (B)×4 } Volume
VR06	1015220	500kΩ (B)×2 }

5-21. F-2690 DIN Terminal Circuit Board (Stock No. 7594191 MODEL 8080DB/890DB) (Stock No. 7594281 MODEL 9090DB/990DB)

Conductor Side

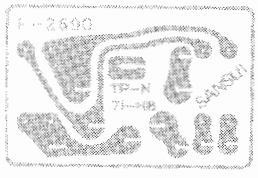

Parts List

Parts No.	Stock No.	Description
J01	2090030	5P Connector Socket

5-22. Figures

Connectors & Pin Ass'y

Connectors

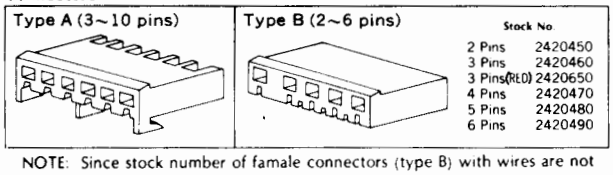

NOTE: Since stock number of famale connectors (type B) with wires are not shown in each parts list of Complete circuit board, please refer to the above parts list when ordering the connector.

Pin Ass'y

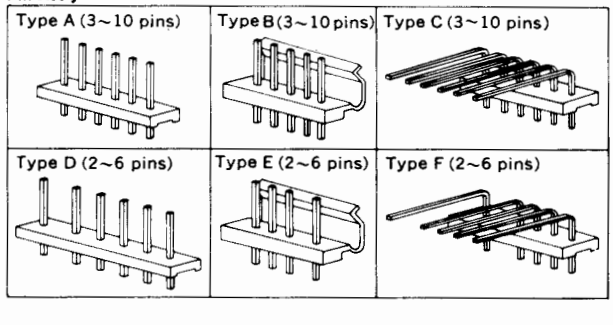

6. OTHER PARTS

6-1. Top Side

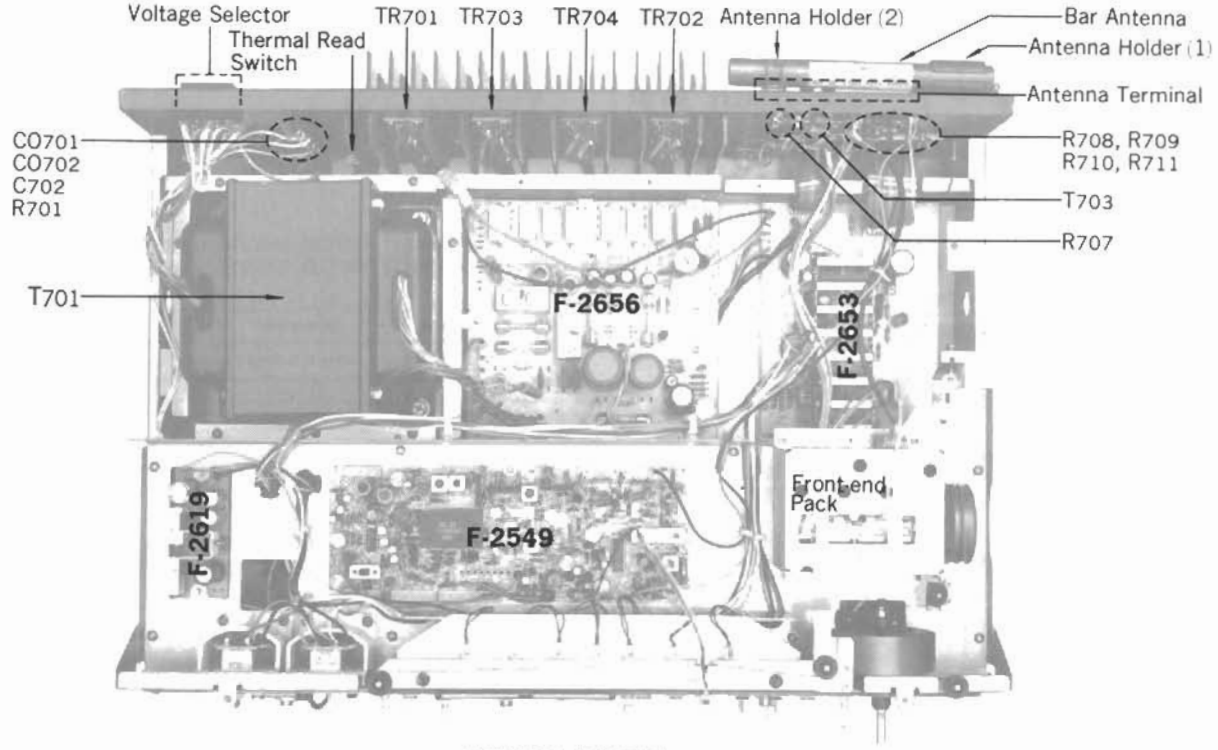

(9090DB/990DB)

6-2. Bottom Side

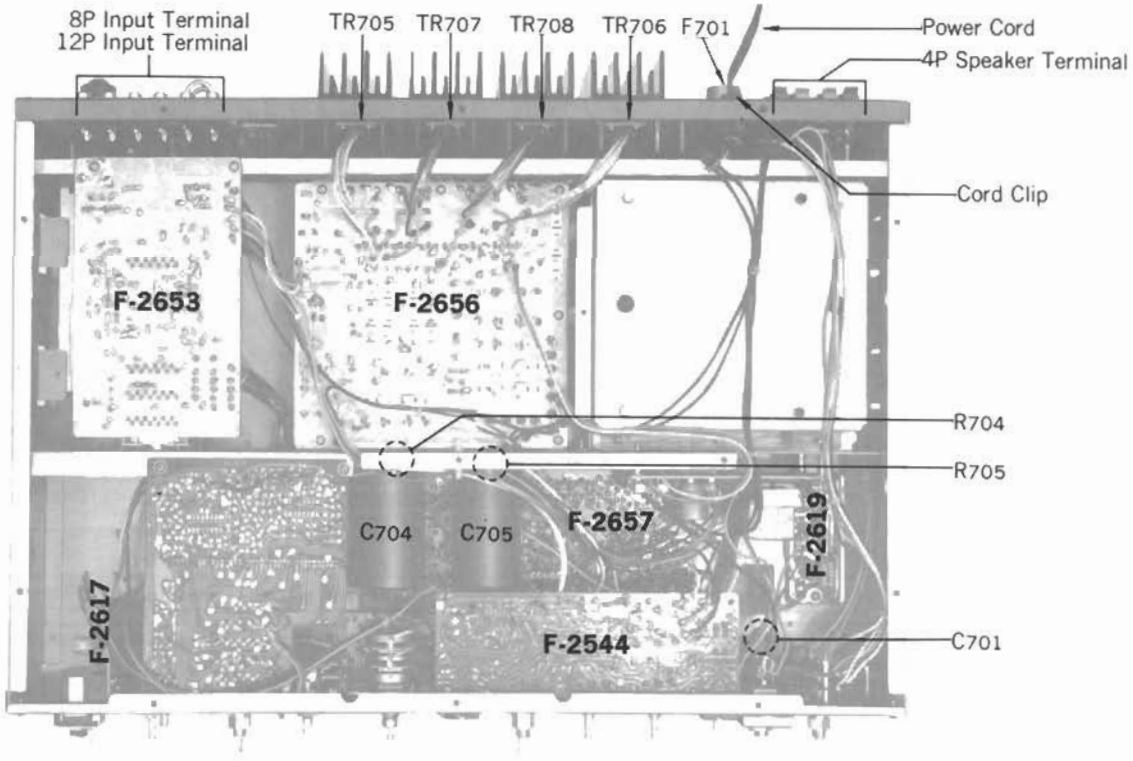

(9090DB/990DB)

Parts List (Top Side & Bottom Side)

Parts No.	Stock No.	Description	Position
C701	0605337	0.033μF 250V M.C.	
C702	0659802	0.0047μF 150V C.C.	
R701	0114335	3.3MΩ ½W S.R.	
R704, 705	0104472	4.7kΩ 1 W C.R.	
R707	0103122	1.2kΩ ½W C.R.	
T702	4200760	Bar Antenna	
T703	4290021	75Ω/300Ω Balun	
S703	1900020	Thermal Reed Switch	
	2300060	Power Fuse Holder	
CO701, 702	2450060	AC Outlet	
	2200450	8P Input Terminal	
	2200490	12P Input Terminal	
	2210310	Antenna Terminal	
	2230150	Ground Terminal	
	2290160	4P Speaker Terminal	
	2410091	Voltage Selector, plug	
	2410830	Voltage Selector, socket	
	3800010	Power Cord	
	3910490	Cord Clip, power cord	
	5286450	Antenna Holder (1)	
	5286480	Antenna Holder (2)	
	3910510	Cord Clip, antenna	

8080DB/890DBOnly

TR701, 702	0305840 or 0305841	2SC1116 (R) or 2SC1116 (O)	Transistor
TR703, 704	0300520 or 0300521	2SA747 (R) or 2SA747 (O)	Transistor
C703, 704	0559518	12000μF 63V E.C.	
T701	4002540	Power Transformer	
F701	0432280	4A. 125V (AC 220~240V)	
	0432500	7A. 125V (AC 100~120V)	

9090DB/990DBOnly

TR701, 702	0308470 or 0308471	2SD424 (R) or 2SD424 (O)	Transistor
TR703, 704	0303300 or 0303301	2SB554 (R) or 2SB554 (O)	Transistor
TR705, 706	0308470 or 0308471	2SD424 (R) or 2SD424 (O)	Transistor
TR707, 708	0303300 or 0303301	2SB554 (R) or 2SB554 (O)	Transistor
C703, 704	0559844	12000μF 80V E.C.	
T701	4002530	Power Transformer	
F701	0432500	7A, 125V (AC 220~240V)	
	0434060	10A, 250V (AC 100~120V)	

Parts List (Exploded View)

Parts No.	Stock No.	Description
1	5726923	Bonnet (8080DB/890DB)
	5726933	Bonnet (9090DB/990DB)
2	5996104	Panel Sash (8080DB)
	5996098	Panel Sash (9090DB)
	5996104	Panel Sash (890DB)
	5996093	Panel Sash (990DB)
3	5326560	Push Knob (890DB/990DB)
	5326550	Push knob (8080DB/9090DB)
4	5318380	Speakers Knob, M-7 Type (8080DB/890DB)
	5318400	Speakers Knob, E-2 Type (9090DB/990DB)
5	7106130	Lever Switch Knob, C-2 Type (9090DB/990DB)
6	5318410	S-10 Type Knob
7	5318440	Volume Knob, WI-6 Type
8	5318431	Balance Volume Knob, WO-8 Type
9	5318340	N-6 Type Knob
10	5318410	S-10 Type Knob (8080DB/890DB)
	5318390	E-1 Type Knob (9090DB/990DB)
11	5318380	M-7 Type Knob (8080DB/890DB)
	5318400	E-2 Type Knob (9090DB/990DB)
12	5326570	Push Botton
13	7007450	Front Panel Ass'y (8080DB)
	7007430	Front Panel Ass'y (890DB)
	7007420	Front Panel Ass,y (990DB)
	7007440	Front Panel Ass'y (9090DB)
	5309840	Panel Window 8080DB/890DB
	5336500	Sansui Mark 9090DB/990DB
	5446330	Smoked Plate (8080DB)
	5446310	Smoked Plate (9090DB)
	5446340	Smoked Plate (890DB)
	5446320	Smoked Plate (990DB)
14	5318420	Tuning Knob, T-12 Type(8080DB/9090DB)
	5318450	Tuning Knob, T-13 Type (890DB/990DB)
15	1131190	Power Switch
16	1104360, 1	Speakers Switch
17	0319040	Power Indicator, LED
18	2430190	Head Phone Jack
19	1131270	Push Switch
20	5047470	Masking, Lever Switch (9090DB/990DB)
21	1171220	Bass Selector (9090DB/990DB)
22	1010930, 1	Bass Volume, 100kΩB
23	4301010	Power Meter
24	7726180	Power Meter Circuit Board
25	1010930, 1	Midrange Volume, 100kΩB
26	1010930, 1	Treble Volume, 100kΩB
27	1171240	Treble Selector (9090DB/990DB)
28	1060320, 1	Master & Balance Volume
29	1131380	Push Switch
30	1015220, 1	PLAY CAL Control Volume, 50kBΩ × 2
31	1065051	REC LEVEL Control, 500kΩB × 4
32	1105220	Dolby NR Switch
34	1005290, 1	MIC Volume, 20kΩ
35	2430240	MIC Jack
36	5416350	Holder Dial Pointer
37	5516030	Teflon Sheet
38	0400450	Dial Pointer Lamp
39	5416050	Dial Pointer
40	5408120	Dial Glass
41	7036453	Tuning Unit
42	5288390	Meter Holder
43	4300740	Signal Meter
44	4300750	Tune Meter
45	0420040	Meter Lamp
46	0400420	FM Stereo Indicator
47	0400540	Indicator Lamp
48	5066211	Illumination Box
49	7136082	Tension Unit
50	6146670	Dial pulley, D-44
51	5517050	Leg
52	5058512	Bottom Plate (8080DB/9090DB)
	505811	Bottom Plate (890DB/990DB)

6-3. Exploded View

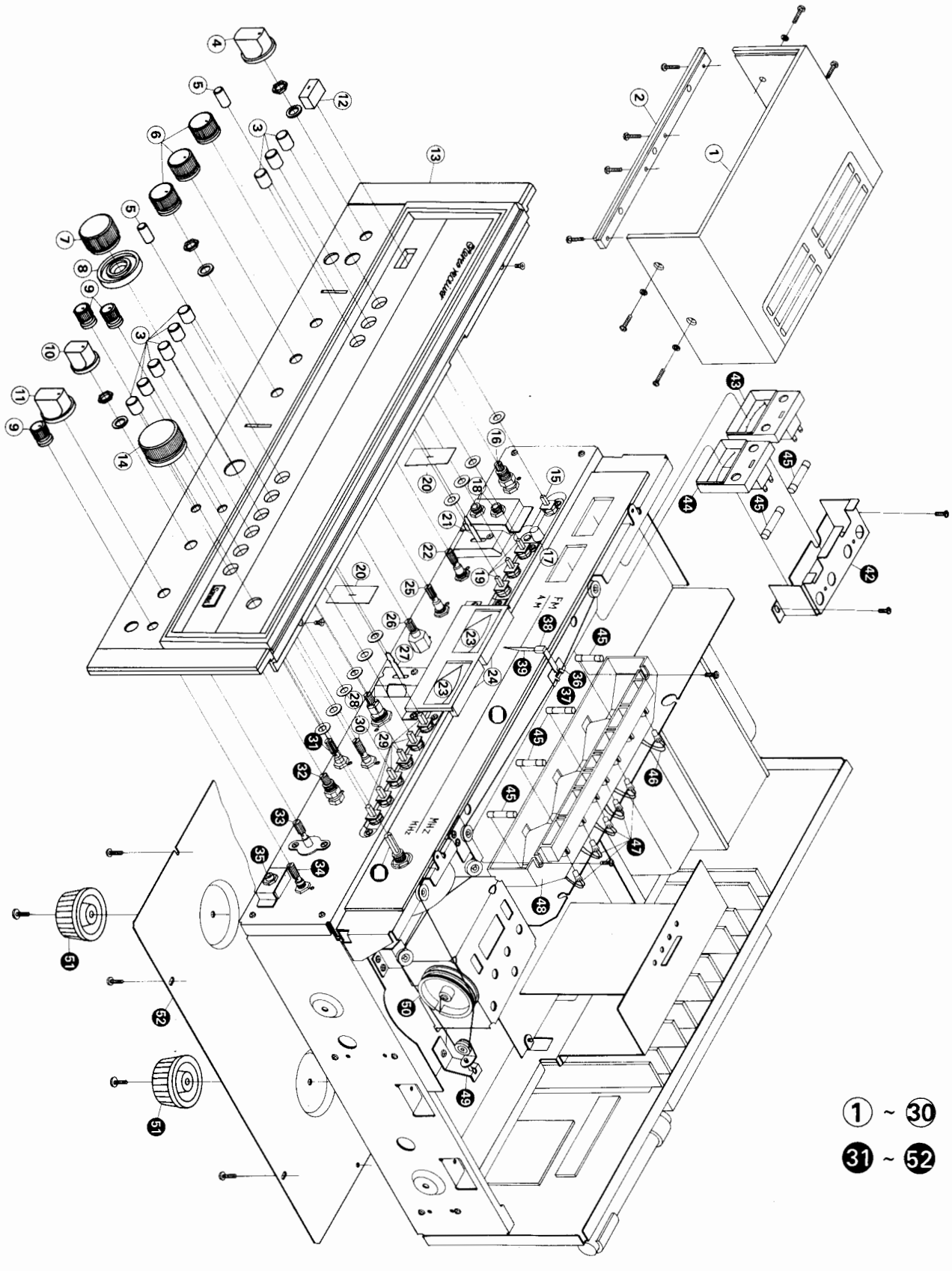

7. SCHEMATIC DIAGRAM

7-1. Tuner Section (8080DB/9090DB,890DB/990DB)

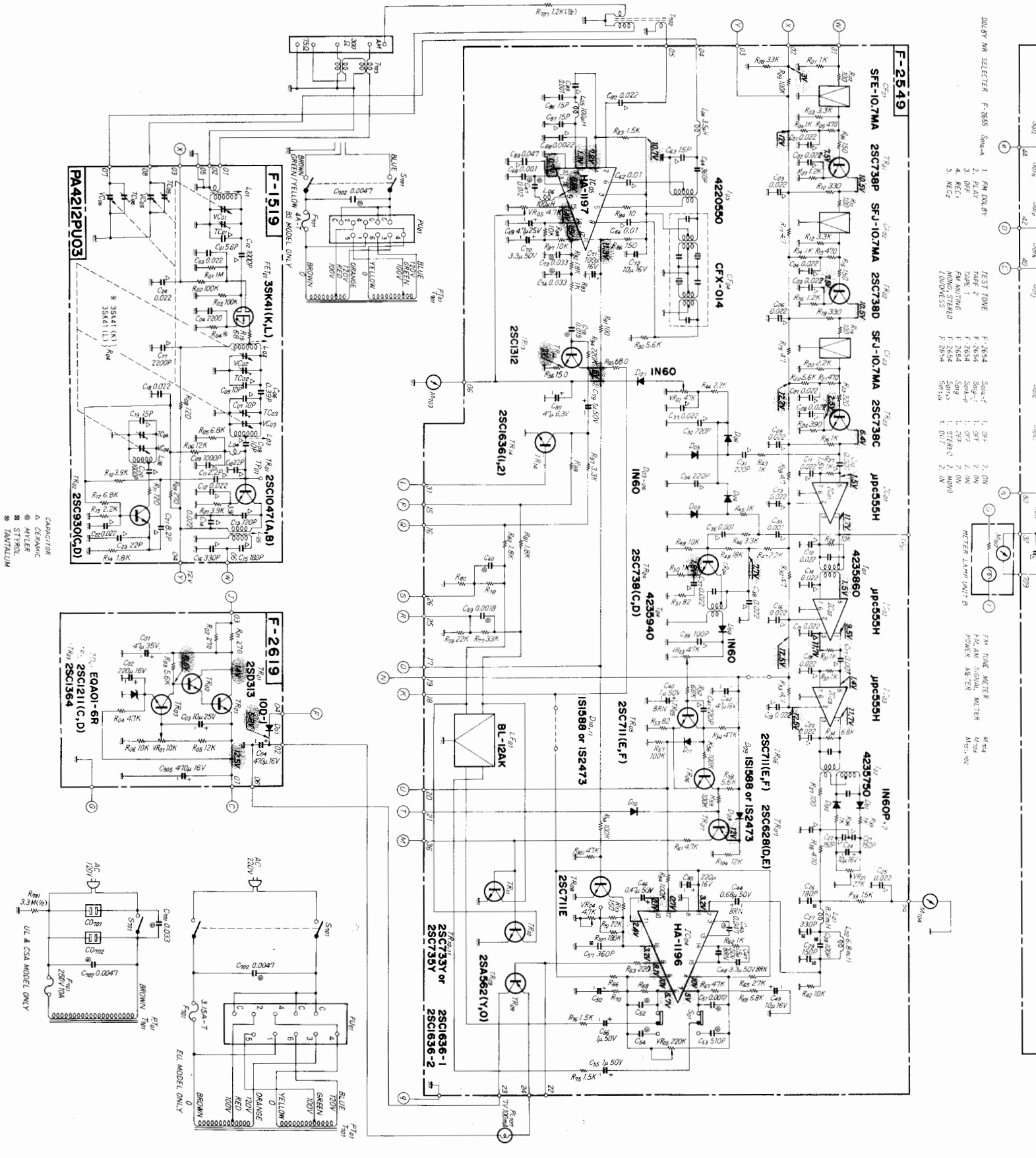

890DB/990DB)

* La présentation et les spécifications sont susceptibles d'être modifiées sans préavis par suites d'améliorations éventuelles.
* Anderungen, die dem technischen Fortschritt dienen, bleiben vorbehalten.
* Design and specifications subject to change without notice for improvements.

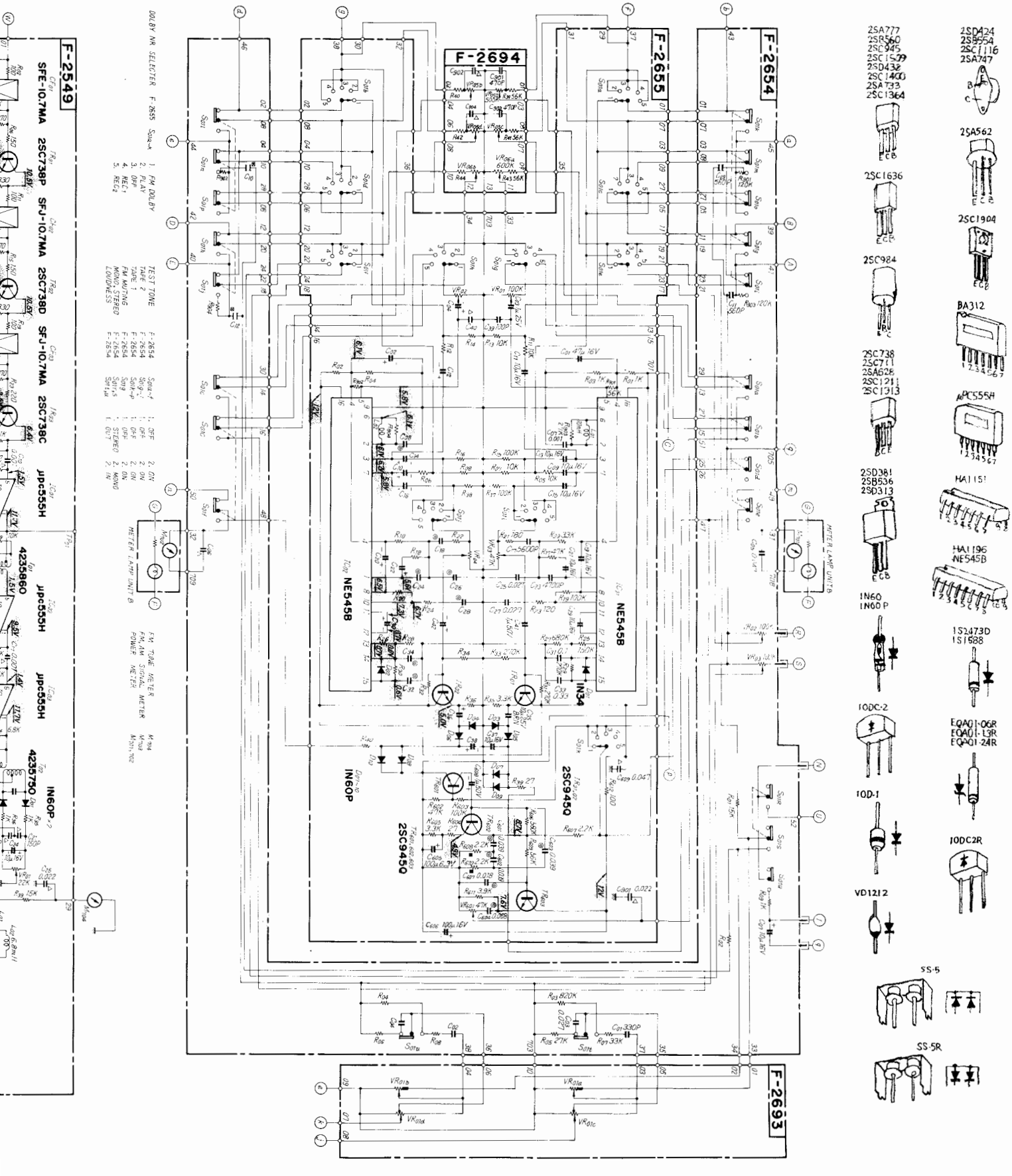

7-2. Audio Section (8080DB/890DB)

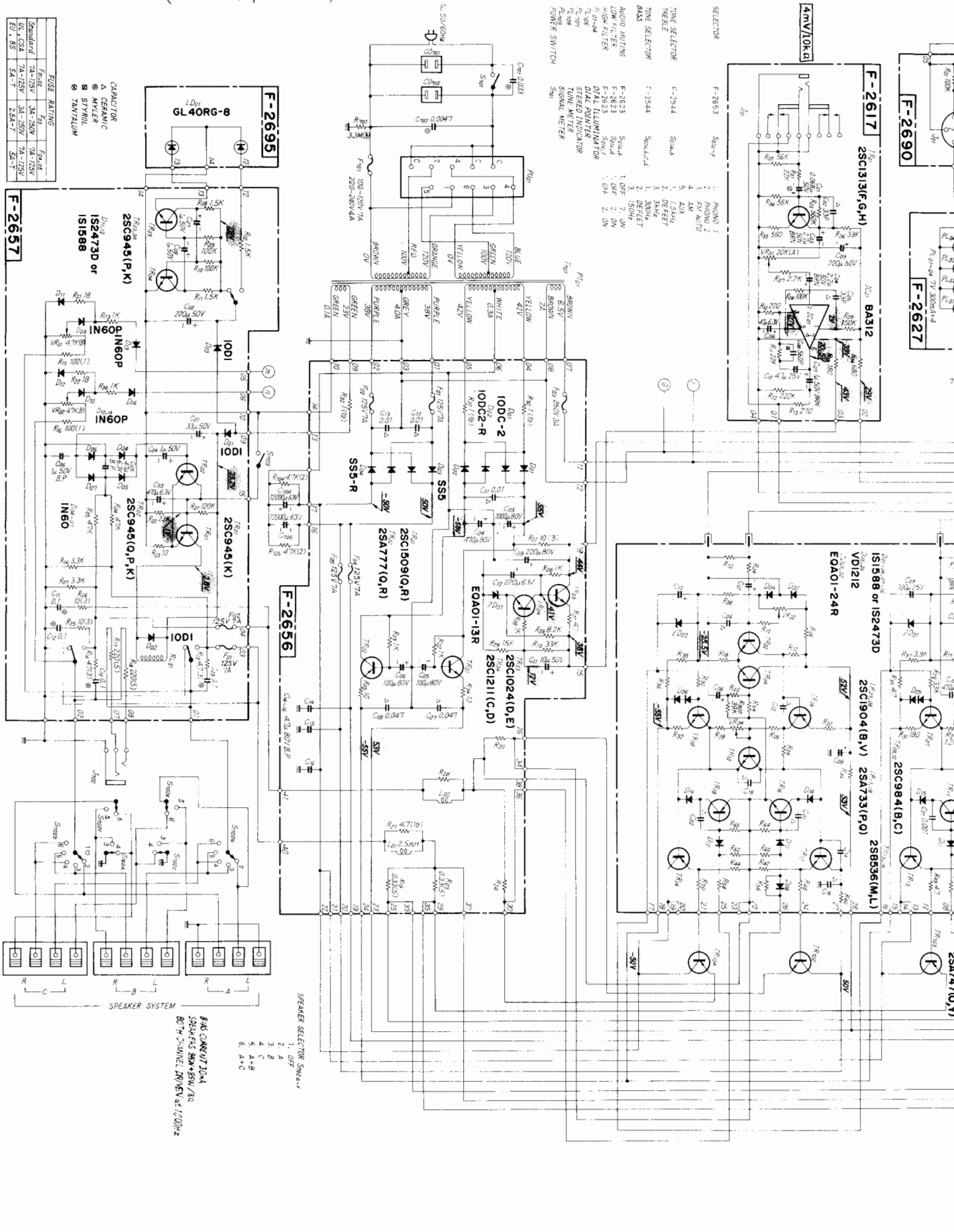

* La présentation et les spécifications sont susceptibles d'éter modifiées sans préavis par suites d'améliorations éventuelles.
* Anderungen, die dem technischen Fortschritt dienen, bleiben vorbehalten.
* Design and specifications subject to change without notice for improvements.

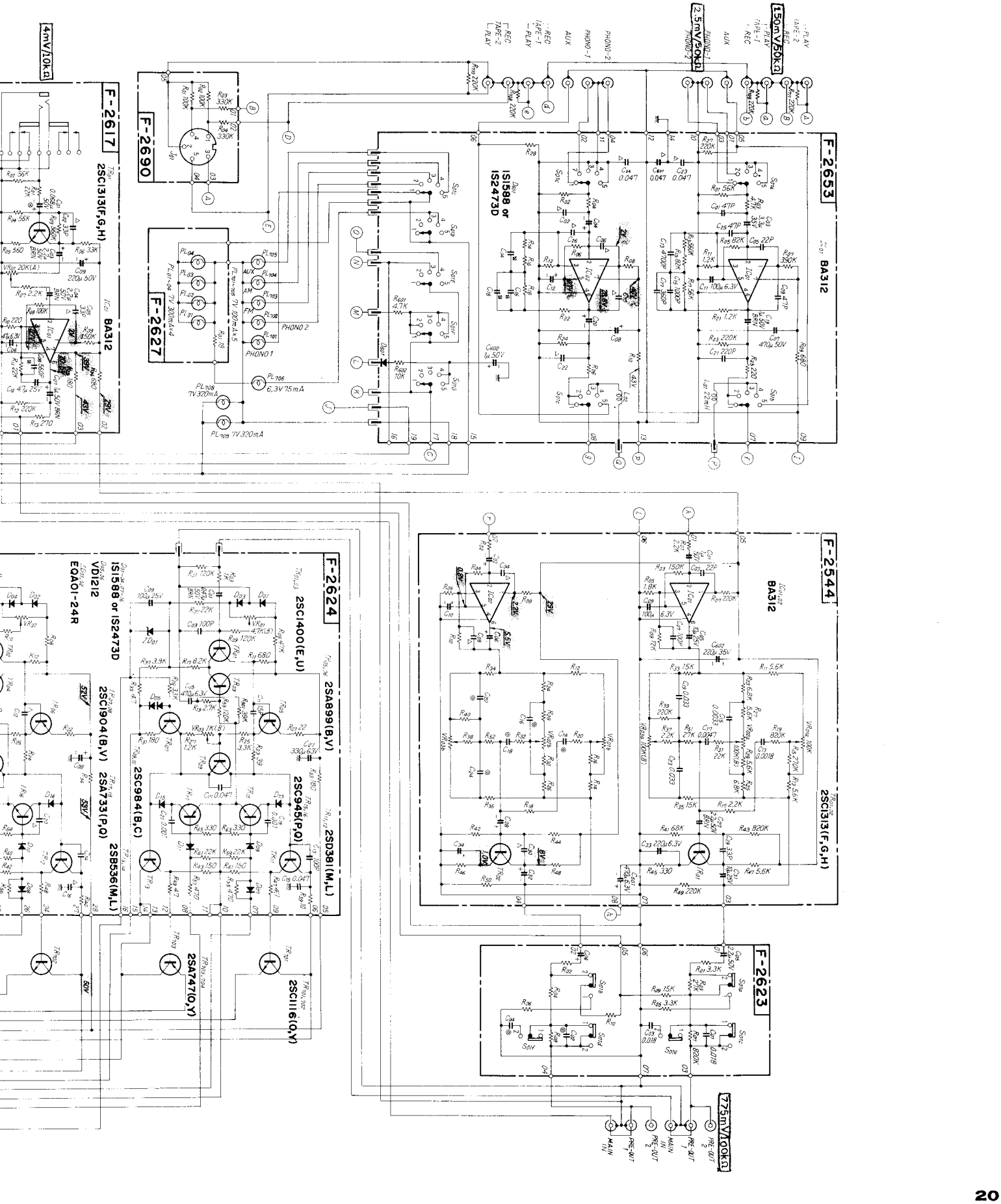

7-3. Audio Section (9090DB/990DB)

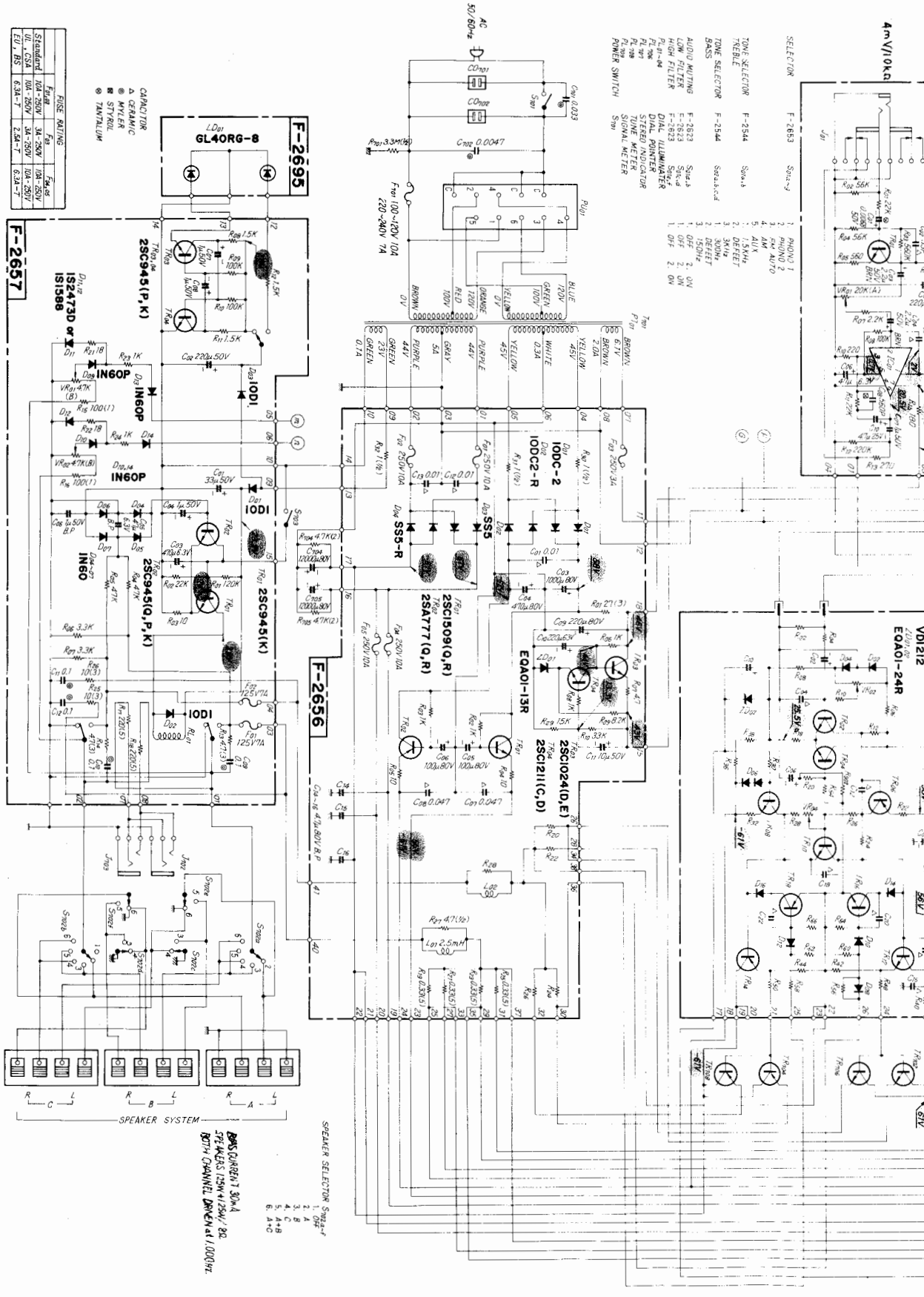

*La présentation et les spécifications sont susceptibles d'éter modifiées sans préavis par suites d'améliorations éventuelles.
** Änderungen, die dem technischen Fortschritt dienen, bleiben vorbehalten.
** Design and specifications subject to change without notice for improvements.

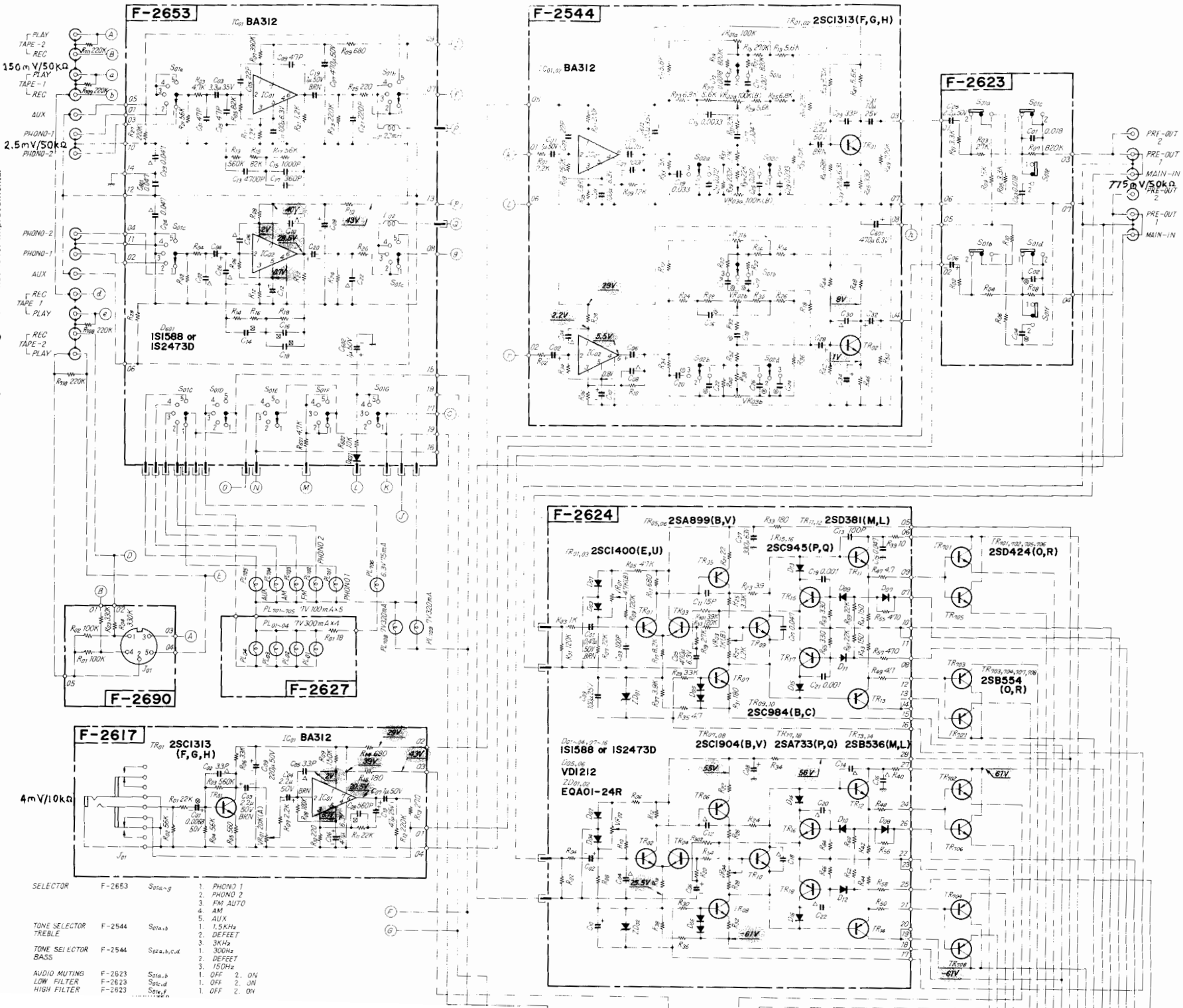

SELECTOR	F-2653	$S_{01a\sim g}$	1. PHONO 1 2. PHONO 2 3. FM AUTO 4. AM 5. AUX
TONE SELECTOR TREBLE	F-2544	$S_{01a,b}$	1. 1.5KHz 2. DEFEET 3. 3KHz
TONE SELECTOR BASS	F-2544	$S_{02a,b,c,d}$	1. 300Hz 2. DEFEET 3. 150Hz
AUDIO MUTING	F-2623	$S_{01a,b}$	1. OFF 2. ON
LOW FILTER	F-2623	$S_{01c,d}$	1. OFF 2. ON
HIGH FILTER	F-2623	$S_{01e,f}$	1. OFF 2. ON

8. THREADING OF DIAL CORD

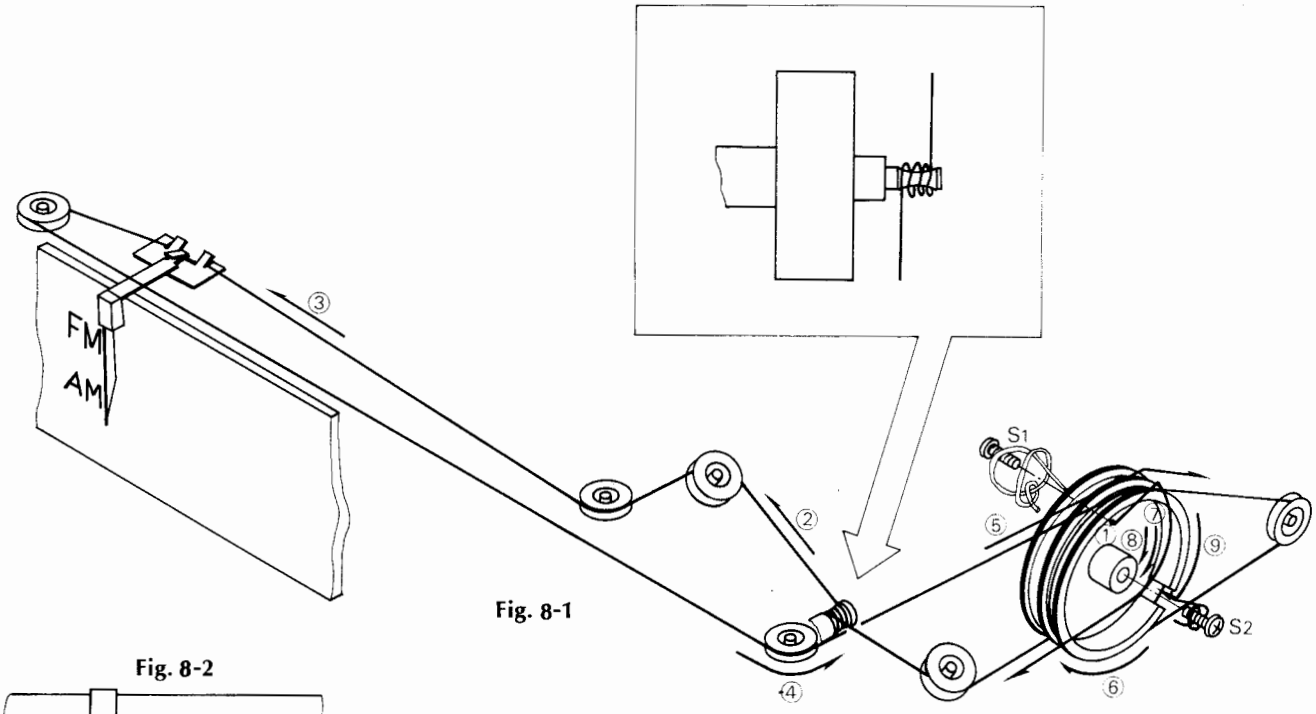

Fig. 8-1

Fig. 8-2

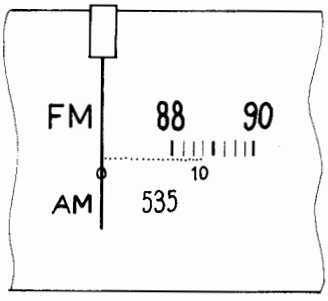

*If a dial cord is cut off or slips, replace it by following procedures.
As these units use 0.6mmϕ cord, please replace it with the same type certainly.
*The length of dial cord is approximately 155cm (63 inch)

8-1. Threading of Dial Cord

Thread the dial cord in numerical order from ① to ⑨ as Fig. 8-1.

1) Close the variable capacitor completely (Max. capacitance).
2) Tie dial cord to the screw, S1 .
3) Thread cord in the direction of arrow from ① to ⑨
4) After ⑨, tie the cord to the screw S2 of the dial pulley.

8-2. Attachment of Dial Pointer

1) Close the variable capacitor completely.
2) Set the dial pointer to the 0 position on dial scale (Fig. 8-2).

*Confirm that the dial pointer runs smoothly on the dial scale by turning the tuning shaft.

Stock No.	Description
6036051	Dial Cord (0.6mmϕ)
6146670	D44 Type Pulley

9. PACKING LIST

Parts No.	Stock No.	Description
1	9116271	Vinyl Cover
	9126070	Poryetylene Sheet
2	9027940	Stylofoam Packing (Upper)
3	9027930	Stylofoam Packing (Lower)
4	9009260	Carton Case (8080DB)
	9009270	Carton Case (9090DB)
	9009380	Carton Case (890DB)
	9009370	Carton Case (990DB)
	5996080	Curl Stopper

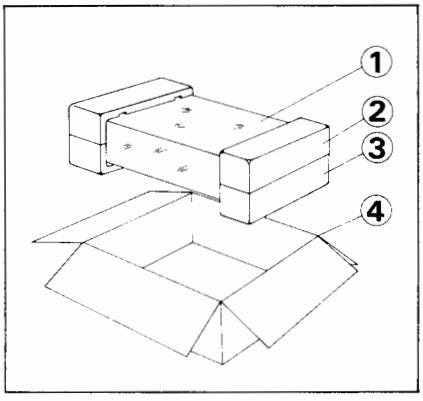

10. ACCESSORY PARTS LIST

Parts No.	Stock No.	Description
	9202380	Operating Instructions (8080DB)
	9202390	Operating Instructions (9090DB)
	9209740	Operating Instruction (890DB)
	9209730	Operating Instruction (890DB)
	9237520	Schematic Diagram (890DB)
	9237530	Schematic Diagram (990DB)
	9237420	Schematic Diagram (8080DB)
	9237410	Schematic Diagram (9090DB)

Sansui
SANSUI ELECTRIC CO., LTD.
14-1 Izumi 2-Chome, Suginami-ku, TOKYO 168 JAPAN
TELEPHONE: (03) 323-1111/TELEX. 232-2076

Printed in Japan (D60720M)